PLASTICS·PIPE·INSTITUTE®

POLYETHYLENE PIPING SYSTEMS FIELD MANUAL FOR MUNICIPAL WATER

PLASTICS·PIPE·INSTITUTE®

Polyethylene Piping Systems Field Manual for Municipal Water Applications

M&I Division
2009 Edition

Table of Contents

Table of Contents **2**
PE Piping Systems Overview **3**
Sizes, Specifications, Pressure Ratings 4
Marking 5
SAFETY! **6**
Flushing and Disinfecting 6
Contaminated Soils 6
General Precautions and Practices 6
Handling Pipe and Fittings 7
Storing **13**
PE Water Service Lines **15**
Sizes, Pressures, and Specifications 15
Burial 17
Connections to Mains 18
Water Service Line Connections 22
PE Water Distribution Piping **27**
Sizes, Pressures, and Specifications 27
Burial 27
Fusion 37
Electrofusion 56
Transitions to Non-PE piping 72
Quality Assurance and Field Testing **84**
Leak Testing – Considerations for All Procedures 84
Maintenance and Repair **86**
Electrofusion Repair 86
Flange Repair 87
Mechanical Repair 87

PE Piping Systems Overview

Since its discovery in 1933, polyethylene (PE) has grown to become one of the world's most widely used and recognized thermoplastic materials. Today's modern PE resins are highly engineered for rigorous applications such as pressure-rated gas, recycled water, sanitary and drinking water systems, sustainable energy systems, landfill membranes, automotive fuel tanks and other demanding applications.

Figure 1: Complete PE Water System

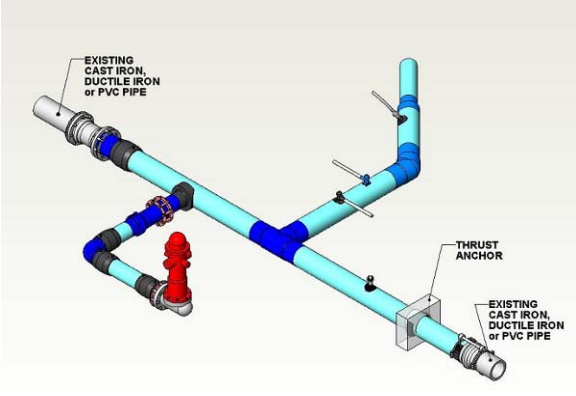

Some of the specific benefits of PE pipe are:

- Life Cycle and Construction Cost Savings – For municipal applications, the life cycle and construction cost of PE pipe can be significantly less than other pipe materials.

- Leak-Free, Fully Restrained Joints - PE heat fusion joining forms leak-free joints that are as strong as, or stronger than, the pipe itself. For municipal applications, fused joints eliminate the potential leak points.

- Construction Advantages – PE pipe's combination of light weight, flexibility and leak-free, fully restrained joints permits unique and cost-effective installation methods that are not practical with alternate materials.

- Durability – PE pipe installations are cost-effective and have long-term cost advantages due to the pipe's physical properties, leak-free joints and reduced maintenance costs.

Sizes, Specifications, Pressure Ratings

Standard Diameters

PE pressure pipe is available in diameters from ½" through 65". Standard specifications for PE pipe allow the pipe to be made to either controlled inside diameters or to controlled outside diameters. The inside diameter system is used for small sizes that use insert type fittings or with special mechanical compression fittings designed for SIDR 7 pipe. The outside diameter systems are for use with fusion or with fittings that require a predictable outside diameter.

There is one standard inside diameter sizing convention, SIDR, based on Schedule 40 series iron pipe sizes (IPS). There are four standard outside diameter sizing systems:

- Iron Pipe Sized (IPS) pipe
- Ductile Iron Pipe Sizes (DIPS)
- Copper Tubing Sizes (CTS)
- International Standards Organization (ISO 161/1) pipe

Standard Pressure Ratings for Water

TABLE 1
Standard Pressure Ratings for Water, at 73ºF (23ºC), for SDR-PR Pipes, psig

Standard Dimension Ratio		Standard Pressure Rating (psig) as a function of a Material's Hydrostatic Design Stress (HDS) for Water, at 73°F (23°C), psi *		
SDR (In the Case of Pipes Made to Standard OD's)	SIDR (In the Case of Pipes Made to Standard ID's)	HDS = 630psi	HDS = 800psi	HDS = 1000psi
17.0	15.0	80	100	125
13.5	11.5	100	125	160
11.0	9.0	125	160	200
9.0	7.0	160	200	250

*Test pressures for short-term pressure leak tests can be 1.5 times the listed pressures.

Marking

Pipe

ASTM, AWWA, NSF and CSA standards require that markings on pipe and tubing be present at frequent intervals – generally not less than every 5 feet – and that they include at least the following items of information:

- The nominal pipe or tubing size (e.g., 1-inch);
- The type of PE material from which the pipe is made (e.g., PE 4710);
- The pipe or tubing dimension ratio or the pipe pressure rating or pressure class for 73° F water, or both;
- The standard against which the pipe has been made and tested;
- The manufacturer's name or trademark;
- Production record coding the place and time of manufacture; and
- The seal or mark of the certification agency that has determined the suitability of the pipe for potable water service.

Figure 2: Typical Pipe Marking Configuration

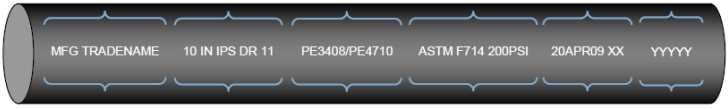

Manufacturer's Name or Trademark	Pipe Diameter, Diameter Basis, and DR/SDR	PE Material Type; indicated by Material Designation or cell classification	Product Standard(s), may include Pressure Rating or Pressure Class	Production Date may also include lot number, footage, and/or Package number	Other Markings can include Resin Codes, 3rd Party Certification codes,

Fittings

At a minimum, all fittings used for PE water service pipe should be clearly marked with the manufacturer's name or trademark and the nominal size of the pipe for which they are designed. In addition, the seal or mark of the agency that has certified the conformance of the fitting material to NSF-61 and its suitability for potable water service should be visible.

SAFETY!

Flushing and Disinfecting

Water piping should be flushed and disinfected in accordance with AWWA C651. Chlorine disinfection, when conducted within the guidelines of AWWA C651, does not have a significant adverse affect on the performance of PE pipe.

Contaminated Soils

When water pipelines are installed or repaired in ground known to be contaminated with hydrocarbons, special considerations apply. The AWWA has addressed concerns regarding hydrocarbon permeation by including a permeation statement in all of its pipe standards including standards for PE (C901-07 and C906-07), PVC (C900-07 and C905-97), steel (C200-05), ductile Iron (C110-03), and others.

Hydrocarbon contamination plumes are relatively compact and usually less than fifty feet in length. If contaminated soils are encountered, do one of the following:

- Surround the pipe with good clean soil of Class I or Class II materials to allow the hydrocarbons that may have contacted the pipe's wall to dissipate into the atmosphere and in the envelope of the surrounding soil. The US EPA guidelines prohibit the reuse of excavated hydrocarbon contaminated soil in the envelope of bedding or backfill material.
- Sleeve the pipe in areas where active hydrocarbon contamination is known to exist.
- Reroute the pipe around the contaminated plume.

Hydrocarbons do not degrade polyethylene but can diffuse through the wall of PE pipe in areas of gross contamination. The exterior contact may affect sidewall fusions and or butt fusions; thus, after PE pipes have been exposed to grossly contaminated soils, mechanical connections may be preferred.

General Precautions and Practices

It is the responsibility of the user of this manual to know and follow safe practices. Obtain and consult specific information from equipment suppliers, authorities with jurisdiction, and applicable regulations and codes, as needed.

Handling Pipe and Fittings

Receiving

The truck must be parked on level ground. The parking brake (hand brake) should be set and the wheels chocked. It is preferred that the truck be shut off and left in gear. The location of the driver should be known at all times.

Figure 3: Use Care in Unloading Pipe Bundles

General Handling Precautions

Stay Clear Of Trucks Being Unloaded

Only persons directly needed to unload pipe, such as the equipment operator, should be allowed in the vicinity of a truck being unloaded. All others must stay well clear of the unloading area.

Slippery When Wet

Polyethylene pipe is extremely slippery when wet. Use caution at all times, especially in rainy or snowy weather.

Hot When Stored Outside

Black pipe exposed to sunlight may be hot! Always use caution before handling pipe that has been exposed to direct sunlight.

General Handling Recommendations

Power equipment is generally used to handle pipes greater than 8" in diameter. Power lifting equipment includes forklifts, cherry pickers, backhoes, front-end loaders and cranes. Excessive lengths, high weights or uneven site conditions can require the use of multiple pieces of lifting equipment. Only experienced operators should be allowed to utilize power equipment.

For lifting loose pipe off rail cars with side stakes, a minimum 15-foot lift is required. For lifting pipe off trucks with side rails, a minimum 11-foot lift is required.

The staging area (operating space) must be clear of workers and obstacles and must provide the operator with a clear line-of-sight. Mark off the staging area to alert other workers that lifting equipment is being used.

Never exceed the rated lifting capacity of the equipment. All equipment specifically designed for lifting will be marked with a safe lifting capacity.

Forklifts

The use of forklift trucks necessitates observing a number of OSHA standards. The proper and safe use of forklifts is the responsibility of the operator. Special procedures for handling PE pipe are:

- Check the forks for jagged edges or burrs. If the forks are marred, cover them with a suitable protective covering to prevent gouging of the pipe;
- Use the forks in the widest possible position;
- Always lift from the center of the pipe at the center of the forks;
- Always slowly enter the forks underneath the pipe; never jerk or ram them in;
- Tilt back the load only enough to stabilize the load; and
- Operate as close to the ground as possible when moving pipe from one location to another, but do not allow the pipe to drag or scrape along the ground.

Figure 4: Using a Forklift for Unloading Pipe Bundles

Front End Loaders

When equipped with forks, front-end loaders can be operated as forklifts and the same procedures must be followed as indicated above. Typically, front-end loaders are used to lift and move large diameter pipe.

Mobile Cranes

When lifting pipe from overhead some additional requirements must be observed. Locate overhead obstructions such as wires and trees and keep a minimum 10-foot clearance at all times. Obstacles in the trench, meter pit or vault must also be avoided.

Inspect rigging for damage. Never swing a load of pipe or fittings over workers or in areas that are used as pathways for traveling. Operate the crane at constant speed. Avoid jerking and sudden movements.

Backhoes

Backhoes are often operated as cranes. The hook on the underside of the bucket is used to lift and transport pipe. The use of backhoes is common since they are almost always available on the job site. The same precautions used for cranes must be followed to ensure their safe operation.

Pipe Handling Accessories

Chains, steel cables, wire ropes and hooks must not be used directly on polyethylene pipe or fittings.

Slings

Wide band slings distribute the lifting load over a large area and prevent point loading or pipe gouging. They can be used as chokers or with spreader bars. Chokers prevent the pipe or fitting from slipping during lifting. Spreader bars are recommended for lifting long lengths of fused pipe.

Nylon Rope

Thick nylon rope can also be used to lift pipe. It provides support similar to slings. Nylon rope can be used as chokers or with spreader bars.

Tongs

Specially designed pipe tongs can be used to lift pipe. They provide lifting support as the pipe weight increases. Do not exceed the design capacity.

Ramps

Ramps can sometimes be used to lower smaller diameter pipe. Ramps require the operator to stand to the side and slowly release the pipe down the ramp. Care must be exercised to avoid losing control during the lowering procedure.

Lifting Requirements

The lifting capacity of a sling or rope is determined by several factors including the type of sling or rope, the kind of hitch used, and how fittings are fastened to them. Typically, accessories should be rated at a minimum of 1.5 times the weight of the heaviest load to be lifted. The angle between each leg of the sling or rope should not exceed 45 degrees. Avoid kinking or twisting any part of the lifting accessory.

Guidelines for Palletized and Non-palletized Coils

The trailer must be level before straps or bands are removed and the coils unloaded. Do not push, pull or roll coils off of the truck. Never stand behind, under or around the load as it is being unloaded. Do not remove straps until the sling is secured. If coils are in silos do not push or pull the silo pack off the end of the truck with a lift truck.

Non-Palletized

Palletized

Guidelines for Straight Lengths

Unloading Bundles from a Flat-Bed Trailer

Figure 5: Use Care in Unloading Bundled Fittings and Pipe

Check that the load has not shifted before removing the nylon straps securing the load to the trailer. Use caution when straightening shifted loads before unloading.

Bundles should be unloaded with fork trucks or cranes equipped with spreader bars with at least three wide web slings. If bundles are stacked and individually strapped to the truck, unload the bulk packs one at a time from the top. Remove only the straps over the pack being unloaded. Steel bands used on bundles should not be removed until the bundles have been transported to the storage area and secured in a stable and safe manner.

Never stand on a load of pipe. Do not roll or drop pipe off the truck. Do not use backhoes, end loaders, or other material handling equipment to push or pull the load off the trailer.

Unloading Strip Loads from a Flat-bed Trailer

When unloading with a forklift, a second truck (or some other means) should be placed on the opposite side to the unloading equipment to prevent pipe from being pushed from the truck.

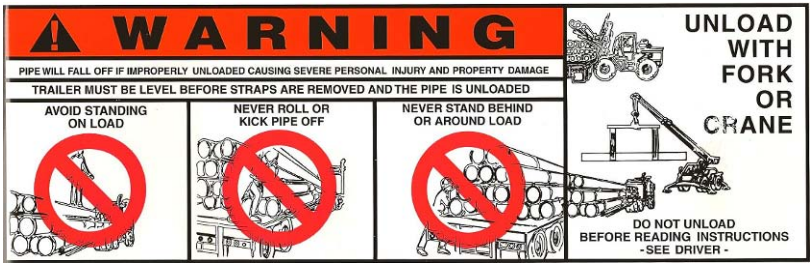

Strip Loads Using Strip Packs

Check that all steel bands are in place before removing the nylon straps securing the load to the trailer. Unload pipe with fork trucks, cranes equipped with wide web slings, or cranes equipped with spreader bars with wide web slings.

If a fork truck is used, the forks should have sufficient length to safely support the strip pack. The pack should be approached slowly at the midpoint of the pipe lengths. To improve the pack stability during transportation, the forks should be as far apart as possible.

If a crane with a single sling is used to unload the strip pack, the lengths should be handled at their midpoints using wide web slings. If multiple slings or a spreader bar equipped with wide web slings are used, the equipment manufacturer's recommended methods and procedures should be used. If the pipe is being unloaded in full rows, do not cut the bands until the row is lowered to the ground; the bands prevent the pipe from rolling.

If the pipe is being unloaded in less than full rows, the bands should be cut and removed only from the length(s) being unloaded. Any loose pipe in the row should be secured with suitable wedges. After each layer is off the trailer, remove dunnage from the top of pipe.

Strip Loads Using Chocks

Assure that all chocks are securely in place on both ends of the timbers. If they are not, nail a chock or other suitable wedge into position. At no time should the chocks on timbers be removed. The chocks prevent pipe from rolling. Check that all chocks are in place before removing the nylon trucker straps securing the load to the trailer. Do not remove "belly" straps until unloading is to take place on that layer. Use caution when straightening shifted loads before unloading.

Pipe should be unloaded with fork trucks or cranes using at least three slings or end hooks. When banded pipe is being unloaded in full or partial rows do not cut the band until the pipe is lowered to the ground. After each layer is off the trailer, remove dunnage from the top of pipe.

Storing

Before pipe and/or fittings are placed into storage, they should be visually inspected for scratches, gouges, discoloration and other defects. Damaged or questionable materials should not be put into storage. Cuts and gouges that reduce the wall thickness by more than 10% may impair long-term service life and should be discarded.

Off-Site Storage Guidelines

Store small pipe in racks according to the length and size of the pipe. Block or strap the pipe to prevent it from rolling or falling off the rack. Pipe larger than two inches in diameter should be stacked with spacing strips between each row. Arrange and block each row of stacked pipe to prevent it from rolling off the pile. If pipe is stored outdoors, make sure all blocks are made of material that won't deteriorate as it weathers.

Material that cannot be stacked because of its size or shape should be stored on shelves capable of supporting the combined weight of the materials.

Job Site Storage Guidelines

The storage area should have a relatively smooth, level surface free of stones, debris or other materials that could damage the pipe or fittings. Where adequate ground conditions do not exist or when a bed cannot be prepared, the pipe may be placed on planking evenly spaced along the pipe length.

Figure 6: Storing PE Pipe

When pipes of variable wall thickness are received, it is recommended that the pipe be segregated into piles, each pile containing a single size and pressure rating to minimize confusion at a later date. The pile should be constructed in a pyramid, with each successive layer having one less pipe than the layer below. The bottom layer should be braced to prevent movement.

The maximum allowable stacking heights for polyethylene pipe should not exceed those in Table 2. Pipe coils should be stored upright on skids on a level surface.

TABLE 2: Suggested Loose Storage Stacking Heights in Rows for HDPE pipe

Nominal PE Pipe Size (in)	Suggested Stacking Height – Rows	
	Above DR 17	**DR 17 & Below**
4	15	12
5	12	10
6	10	8
8	8	6
10	6	5
12	5	4

Indoor/ Outdoor Storage

Expansion and contraction caused by uneven heating during storage in the sun may cause the pipe to bow if not restrained by racks. This does not damage the pipe but may be inconvenient when the pipe is taken out of storage for installation

Since black HDPE pipe generally contains greater than 2% carbon black, it will resist damage from sunlight indefinitely. Colored products are compounded with antioxidants, thermal stabilizers and UV stabilizers. Therefore, non-black products should remain in unprotected outdoor storage for no more than two years (or longer only as recommended by the pipe manufacturer). Black products with stripes are generally suitable for unprotected outdoor storage and service.

.

PE Water Service Lines

Sizes, Pressures, and Specifications

PE Water Service lines are typically ½" to 3" nominal diameter pipe or tubing in accordance with AWWA C901, ASTM D2239, ASTM D3035, or ASTM D2737, with rated pressure of 80 to 250 psig in accordance with Table 1. Water service lines may be joined to themselves or to other types of pipe or fittings.

Options for joining depend on the pipe's sizing convention:

IPS pipe produced per ASTM D3035:

- Heat Fusion
- Electrofusion
- O.D. Mechanical Compression fittings.
- O.D. Stab fittings
    - Internal stiffeners are recommended on ½" – 2" stab and mechanical fittings

CTS pipe produced per ASTM D2737:

- Heat Fusion
- Electrofusion
- O.D. Mechanical Compression fittings.
- O.D. Stab fittings
    - Internal stiffeners are recommended on ½" – 2" stab and mechanical fittings

SIDR pipe produced per ASTM D2239:

- Barbed insert fittings and clamps.
- Double clamping is recommended for pipes 1-1/4" and larger and on pressures exceeding 160 psi.
- SIDR 7 pipe may be joined with O.D. Mechanical Compression fittings made specifically for these pipe sizes.

Figure 7: Typical PE Water Service Line Configuration

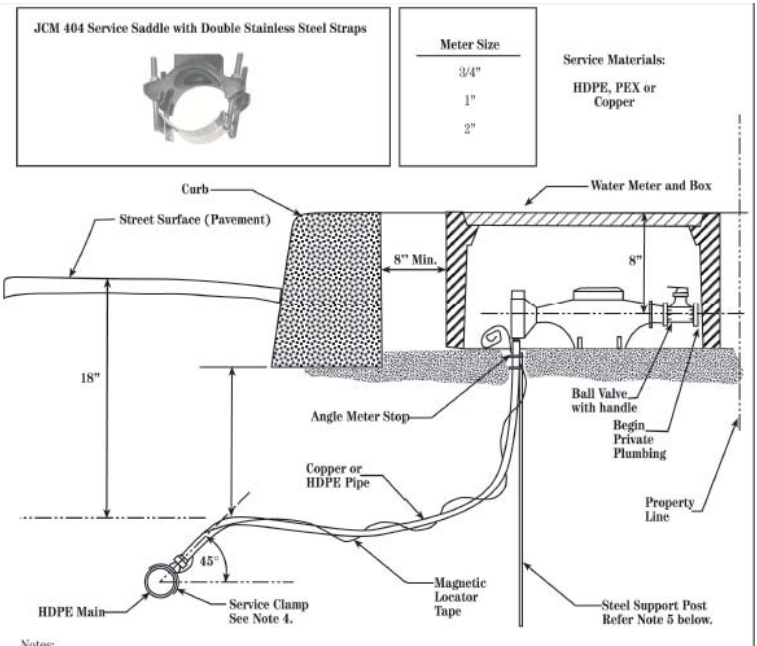

Notes:
1. Meter box shall be supported by two 2" x 4" x 12" solid concrete blocks installed under the long axis sides of the box.
2. Private plumbing must be adjusted to match meter elevation.
3. If meter box is located in a sidewalk area, the box shall be installed adjacent to the back of the curb.
4. Service saddle must have double straps made of stainless steel.
5. When using HDPE, a steel post must be used for support. Attach service line to post with nylon zip ties. The post must be of sufficient length to support the curb stop.

Figure 8: Typical All-PE Water Service Line Configuration

PE Main with Saddle Fusion Tee	Curb Valve with Mechanical Couplings	Meter with PE to Brass Transitions	PE to Copper Mechanical Fitting

Burial

PE Water Service lines can usually be installed using basic simplified trenching and backfill guidelines. Follow all instructions for placement and alignment of pipe and fittings.

Trenching

Prepare trenches for PE Water Service lines in accordance with the Simplified Installation Instructions of this Manual. A trench width of 12 inches is generally suitable for a water service line.

Figure 9: Two PE Water Service Lines

Placement

Place the PE Water Service line in a prepared trench that is free of rocks and debris. Place the pipe so that it is relaxed and “snakes” loosely in the trench. Do not bend the pipe more than the minimum bend radius for the DR of the service line.

Figure 10: Proper vs. Improper Placement in Trench

Compaction and Cover

Complete the compaction and cover of PE Water Service lines in accordance with the Simplified Instructions of this Manual. Do not allow rocks or other hard objects in the vicinity of the buried Water Service line.

Connections to Mains

There are many options available for hooking up a PE service line to a main. To help you select the best option you should consider:

- Type of installation (new or existing);
- Type of main (PE, PVC, Ductile Iron, etc.);
- Type of fittings (mechanical vs. fusion);
- Type of tap (pressure or non pressure); and
- Type of PE service line you want to use (SIDR, CTS, and IPS).

If a new main is being installed, you have the option to install equal or smaller inline tees, wyes or crosses. If the main is already installed, you may use service saddles, branch saddles or tapping tees. Mechanical tapping saddles are available for larger diameter pipe branches.

If the main is made of Ductile Iron, PVC or Concrete, you must use mechanical fittings. If the main is made from PE, you may use either mechanical fittings or fusion. Fusion is the preferred method of connecting to a main because, when done properly, fusion joints do not leak.

If you are using mechanical saddles or fittings you need to ensure they are designed for use with polyethylene pipe. The physical characteristics of PE pipe may contribute to leaking joints when used with fittings that are designed for other materials. In addition, mechanical fittings that use screws or bolts that tighten into the wall of the pipe can cause point loading failures in PE pipe. Fittings that exhibit equal compressive stresses around the wall of PE pipe work best. Consult the fitting manufacturer for recommendations.

Another consideration is whether you will be making a live tap or connecting to a non-pressurized line. When making live taps, Self Tapping tees are recommended. Service saddles with corp. stops are also effective.

Transitioning to the service line is another consideration. You will need to transition from the corp. stop or tapping tee outlet to your service pipe. There are many transition fittings available that will allow you to transition from thread on a corp. stop to SIDR, CTS or IPS pipe. Depending on the brand, the outlet on the self tapping tees may be stab, fusion or compression. Consult the fitting manufacturer.

Fusion to PE Main

The examples that follow illustrate connections to mains made at a vertical (90-degree) angle, for clarity. Actual installation angles may vary in accordance with local requirements or preferences.

Saddle Fusion to PE Main

Connections of PE Service Lines to PE Mains should be made by saddle fusion or saddle electrofusion wherever possible.

Saddle and Saddle Electrofusion Self Tapping tees may be used to live tap PE pressure mains. The main is prepared based on fusion procedures being followed. The Self Tapping Tee is installed on the main. The cutter is threaded into the main then retracted, retaining the coupon. The PE service pipe is installed on the outlet stub using mechanical compression or stab fittings or with heat fusion.

PE service lines can be installed on pressure or non-pressure PE mains using saddle or saddle electrofusion service saddles and corporation stops. Prior to installing the saddle, prepare the main based on the fusion method you are following.

Prepare the main based on the fusion procedures being followed. Fuse the saddle on the main and install the corp. stop. The tap is done with standard tapping tools and procedures for either pressure or non pressure mains. The service tubing is installed on the corp. stop outlet. Transition fittings are available to connect to the threaded outlet on the corp. stop to PE service line.

Saddle or saddle electrofusion Tees can be installed on non pressure PE mains. The main is prepared based on the fusion procedures you are following. The tee is installed. A tap is manually made in the wall of the main. The PE service line is attached to the tee using OD mechanical compression fittings or with fusion.

Figure 11: Saddle Fusion of PE Water Service Line to Main

Follow the procedures for Saddle Fusion given in this Manual to make connections of Water Service lines to Mains with suitable saddle fusion fittings. Figure 11 shows a typical saddle fusion tapping tee with a PE Water Service line stub.

Saddle Electrofusion to PE Main

Figure 12: Saddle Electrofusion of PE Water Service Line to Main

Follow the procedures for Saddle Electrofusion Fusion given in this Manual to make connections of Water Service lines to Mains with suitable saddle fusion fittings. Figure 12 shows a typical electrofusion tapping tee with a stab-type connector for the PE Water Service Line.

Mechanical Connections Mains

Mechanical Connection to PE Mains

If fusion tools are not available, Mechanical Tapping tees can be used to tap live PE pressure mains. The tee is securely installed on the main. The cutter is threaded into the main and then retracted, retaining the coupon. The PE service pipe is installed on the tapping tee outlet using stab, compression fittings or fusion depending on the fitting.

Figure 13: Mechanical Saddle Connection to PE Main

PE service lines can be installed on pressure or non-pressure PE mains using mechanical service saddles and corporation stops. Use of mechanical saddles and sealing gaskets is recommended in areas with minimal temperature changes. Double strapping of the service saddle and sealing gaskets is recommended. Prior to installing the saddle, inspect the pipe for scratches or damage that might create a leak path.

Install the saddle and corp. stop on the main. The tap is done with standard tapping tools and procedures for either pressure or non-pressure mains. The service tubing is installed on the corp. stop outlet. Transition fittings are available to connect to the threaded outlet on the corp. stop. Do not thread any component into the PE pipe wall itself.

Mechanical Connection to Non-PE Mains

Connections of PE Service Lines to non-PE Mains should be made using mechanical fittings designed for the specific application and piping materials.

Install the mechanical service saddle that is designed for the pipe being tapped per the fitting manufacturer's instructions. Install the corporation stop. Make the tap. Transition fittings are available to connect the threaded outlet on the corp. stop to the PE service tubing.

Figure 14: Mechanical Saddle Connection of PE Water Service Line to PVC Main

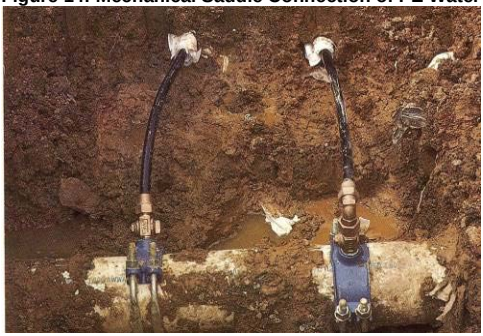

Follow Manufacturer's instructions to install suitable fittings to connect PE Water Service lines to non-PE Mains, such as PVC or Ductile Iron. Use only fittings approved and certified for this application.

Water Service Line Connections

Fusion of PE Water Service Lines

Follow the general instruction in this Manual for making butt-fusion and electrofusion connections in PE Water Service lines. Connection by fusion is the recommended method of joining PE pipe wherever possible. Where mechanical connections are required for transitions, terminations, or joining, use fittings and procedures in accordance with the following section.

Mechanical Connection of PE Water Service Lines

Terminology

Mechanical coupling - a device for joining pipe or tubing that does not require heat fusion or welding and utilizes a gripper ring for restraint and seal/gasket for a leak-free connection. Types of mechanical couplings commonly used on HDPE service tubing include Insertion (stab) and Compression.

Stiffener/Insert - a flanged cylinder of NSF approved material that is inserted into plastic tubing to reinforce the gripping and sealing regions.

Seal/O-Ring/Gasket - a ring, usually made of an elastomer/rubber, that, when compressed, creates a leak-tight seal on the HDPE tubing preventing leakage of water from the fitting.

Gripper Ring - the plastic component of a coupling that grips or restrains the HDPE tubing preventing pullout from the mechanical fitting.

Coupling Body - the pressure bearing vessel that can contain the stiffener, gripper ring and seal/gasket into which the HDPE tubing is inserted.

Chamfer – A bevel or angle put onto the HDPE tubing (required in some coupling products) that aids the insertion of the tubing into the coupling or fitting body.

Compression Coupling - a type of mechanical coupling that requires an outside force to actuate the sealing and gripping mechanisms. This is often accomplished by tightening a nut or retainer.

Insertion (stab) Coupling - a type of mechanical coupling in which the sealing and gripping mechanisms are actuated when PE tubing is inserted

General Considerations

Mechanical fittings are designed to seal and restrain (grip) HDPE service line connections and joints using mechanical means.

When mechanical couplings are used to join HDPE pipes the coupling must provide full restraint and seal on the HDPE tubing or pipe. Water flow thrust forces that develop at bends or at end closures can push an unrestrained mechanical coupling off the pipe end.

HDPE pipes have exceptional resistance to surge pressures. Mechanical couplings must also accommodate repeated surges.

Materials

For potable water piping, use only fittings that use materials listed to NSF-61, with the certification mark visible on each fitting. Fittings not displaying these markings may not be suitable for use on HDPE potable water piping.

Mechanical Fitting Types

There are multiple types of mechanical fittings commonly used on HDPE water pipe and tubing. For this document, we will review the three primary mechanical fittings or connections used. With all type of mechanical couplings, it is strongly recommended that an insert or stiffener be used to support the inside diameter of the HDPE pipe to ensure long-term seal and restraint.

Figure 15 – HDPE Insert Type Mechanical Coupling

These three different technologies can be classified by the method used for completion. They are:

- Stab or insert type;
- Tightening of compression nut or compression type; and
- Pack style or clamp ring.

Stab or Insert Type Mechanical Couplings

The “stab” or insertion style coupling requires no tightening of a compression nut. With stab type couplings, the seal and restraint are accomplished independent of each other. Insert type couplings contain either single or multiple elastomeric o-rings that provide a seal on the outside diameter of the HDPE tubing which has been inserted into the fitting. The seal on the HDPE is accomplished because the inside diameter of the sealing o-ring is smaller than that of the outside diameter of the polyethylene tubing. When the tubing is inserted into the coupling or fitting body, the rubber o-ring is compressed or squeezed onto the HDPE tubing surface, thus creating a watertight seal. Figure 16 reveals the internal components of a typical HDPE stab or insert type coupling.

Figure 16 – HDPE Insert Type Mechanical Coupling

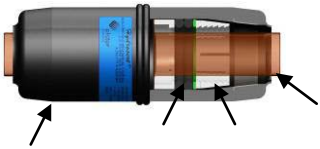

Compression Couplings

Compression style couplings require an outside force to seal. The outside force is commonly a nut that is tightened down by the installer to a stop or predetermined torque value. As the installer tightens the nut, the sealing gasket and/or internal gripping ring is brought onto the HDPE pipe to provide seal and restraint (grip). The gas seal and restraint (grip) are dependent upon the amount of tightness the operator applies to the compression nut.

There are a variety of gripping mechanisms commonly used with compression couplings. One version uses a reinforced gasket – as the nut is tightened, a metal grip ring inside the gasket is driven onto the HDPE tubing as depicted in figure 17a. Another version, the split clamp, contains separate sealing and gripping mechanisms. The seal is accomplished via a compression nut tightened down, while the grip is accomplished by a set screw, as seen in figure 17c. In a third version, as the operator tightens down the compression nut a sealing gasket and gripper ring are forced down upon the HDPE tubing to provide seal and restraint on the pipe. Refer to figure 17d for a component detail of this type of compression coupling.

Compression couplings were originally designed for metallic pipe connections. As such, many designs do not include an ID insert stiffener, which may reduce the compression fitting pull-out strength on PE tubing. Many manufacturers sell insert stiffeners separately. When using a compression type coupling to join or connect to HDPE, it is recommended that an insert stiffener be used to ensure long term restraint and water tight seal.

Figure 17 – Compression Type Mechanical Couplings

17a – Compression Fitting

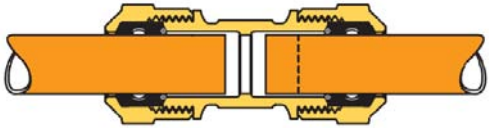

17b – Reinforced Gasket Style

17c – Split Clamp

17d – Compression Nut Style

Installation procedures for mechanical couplings

Installation procedures vary for mechanical couplings based upon the technology utilized. It is suggested that only the manufacturer's supplied installation instructions be used when installing mechanical fittings on HDPE. Installation instructions should be included with each fitting. If instructions are not included with the fitting or are not available, refrain from installing the fitting. As mentioned previously in this document, it is suggested that a stiffener or insert be used when installing a mechanical coupling. Figure 18 details an example of typical insert type coupling installation instructions.

Figure 18 – Installation Instruction for Insert Type Mechanical Coupling

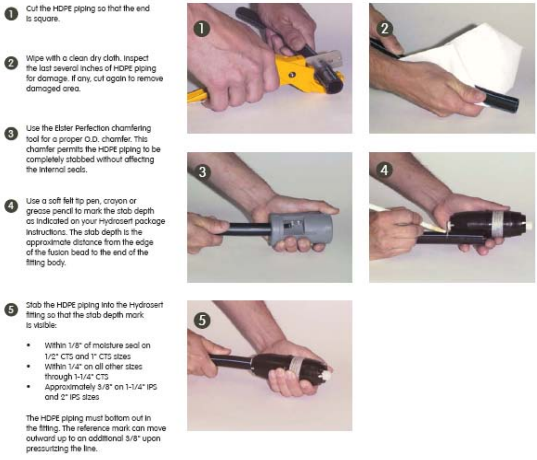

Mechanical Connections to Meter boxes and Curb Stops

Connecting your HDPE service line to meter boxes and curb stops/valves can also be easily accomplished using mechanical couplings. Please refer to Figures 19a-19d for examples of such mechanical connections.

Figure 19 – Meter Box Connection Options

19a: Meter Box Mechanical Coupling

19b: Meter Box Connection Using Clamp Ring Connection

19c: Insert Type Curb Stop

19d: Compression End Curb Stop

PE Water Distribution Piping

Sizes, Pressures, and Specifications

PE water distribution lines are typically 4" to 12" nominal diameter pipe in accordance with AWWA C906, ASTM D3035, or ASTM F714, with rated pressure of 80 to 250 psig in accordance with Table 1.

Burial

The materials enveloping a buried pipe are generally identified as shown by their function or location (see Figure 20).

Figure 20 Pipe Trench

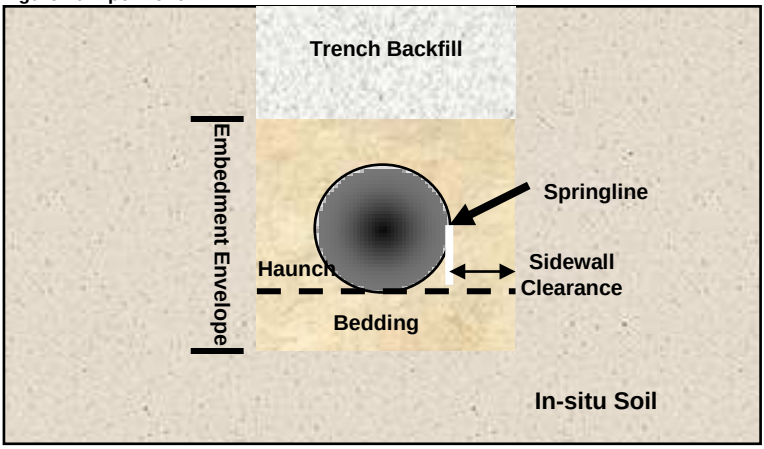

Installation Guidelines for PE Pipe

Install PE pressure pipe in accordance with ASTM D2774.

The engineer must evaluate the site conditions, the subsurface conditions, and the application objectives to determine the extent of support the pipe may need from the surrounding soil. Where the pipe burial depth is relatively deep, where subsurface soil conditions are not supportive of pipe, where surface loads or live loads are present, or where the pipe DR is high, the engineer will generally prepare a specific installation specification. The specific engineered installation instructions should be followed.

The following are general guidelines for the installation of 12” and smaller diameter PE pipe with a minimum cover depth of 2 ft (3 ft under traffic loading; up to 5 feet for frost protection) and a maximum depth of cover of 16 feet. For other depths consult the engineer. Other satisfactory methods or specifications may be available. This information should not be substituted for the judgment of a professional engineer in achieving specific requirements.

Figure 21: Pipe Placement in Open Trench

Trench Construction

Principal considerations in trench construction are trench width, length, and depth; soil stability; and groundwater accumulation in the trench. Unstable soils or wet conditions should be controlled by sloping or bracing the trench walls, de-watering the trench bottom, and/or other measures.

Trench Width

The trench width should allow sufficient room for joining the pipe, if required, snaking small diameter from side to side along the bottom of trench for thermal affects, and filling and compacting the side fills.Table 3 gives suggested minimum trench width values.

TABLE 3
Minimum Trench Width in Stable Ground vs. Pipe Size

Nominal Pipe Size (in.)	Minimum Trench Width (in.)
<3	12
3-12	Pipe OD + 12

Trench Length

The length of open trench required for fused pipe sections should be such that bending and lowering the pipe into the ditch does not exceed the manufacturer's minimum recommended bend radius and result in kinking. Table 4 lists the recommended lengths of trench openings for placement of continuous lengths of fused pipe, assembled above the trench. When the trench sidewalls are significantly sloped, somewhat shorter trench openings may be used.

TABLE 4: Suggested Length of Minimum Trench Opening (Feet) for Installation of Joined Lengths of PE Pipe

Nominal Pipe Size (inches)	Depth of Trench (feet)					
	3	**5**	**7**	**9**	**11**	**13**
½ to 3	15	20	25	30	35	40
4 to 8	25	30	35	40	45	50
10 to 12	35	40	45	50	55	60

Stability of Trench Walls

The embedment material must be placed from undisturbed trench sidewall to undisturbed trench sidewall. Walls of trenches below the elevation of the crown of the pipe should be maintained as vertical as possible. Sloping of trench walls in granular and cohesionless soils should be provided whenever the walls are more than about four feet in depth or otherwise required by state, local or federal regulations. For safety, if the walls are not sloped, they should be stabilized by shoring or bracing. The slope should be approved by the engineer.

Stable soils can be cut vertically or nearly vertically without significant sloughing. If trench sidewalls readily slough off or the trench floor is soft and will not support workers or compaction, it is unstable. The instability is usually a condition of the trench and not the soil. Most often the cause is high groundwater. In unstable soils, the engineer should determine the necessity for special procedures such as a "wide" trench or permanent trench sheeting.

Wherever possible, temporary sheathing and bracing to protect workers should be installed so that its bottom extends no lower than about one-quarter of the pipe diameter below the pipe crown. Sheathing that is installed to project below the pipe springline should be left in place unless, as with some thinner sheathing, it is designed to be pulled and removed without disturbing the embedment next to the pipe. In this case, the trench width should be increased by 12 to 24 inches, depending on the pipe diameter, to allow for minor disturbance to the embedment near the sheathing. Do not use vibratory placement or extraction of sheeting. This can cause severe disturbance to the bedding and liquefaction of the surrounding soils.

Portable Trench Shield

Portable trench shields or boxes can be used with PE pipe. All excavation of the trench below the pipe crown elevation should be done from inside of the shield. The backhoe operator should dig inside of the shield and force the shield down as soil is removed. Where the bottom of the shield extends below the pipe crown, the shield must be vertically raised after each lift is placed and embedment material shovelled under the shield to fill the void created by the shield wall. Figure 22 illustrates the steps used with a Portable Trench Shield.

If possible, use shields that are placed with no portion of their sides extending lower than one-quarter of a pipe diameter below the pipe crown. This minimizes the amount of lifting required and precludes the possibility for disturbing embedment materials. The minimum inside clear width of the box or shield should allow for the minimum trench width requirements for the pipe plus an additional 12 to 24 inches

Figure 22: Installing PE Pipe with a Portable Trench Shield

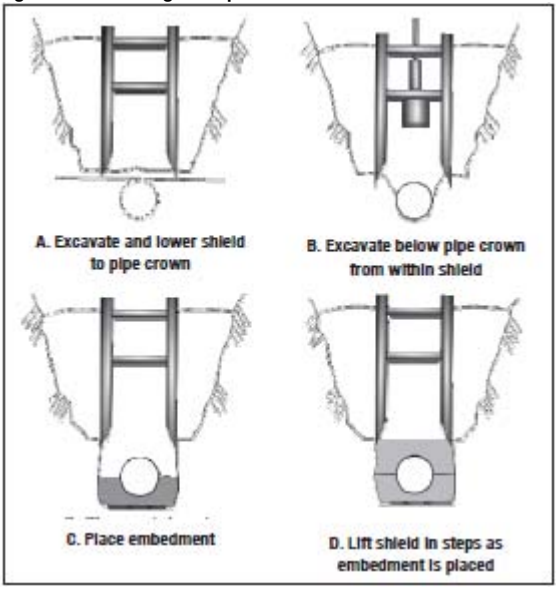

Trench Floor Preparation

The trench floor must be stable in order to support the bedding material. Generally, if the trench floor can be walked on without showing foot prints it is considered stable. Where the trench floor is not stable, in many cases it can be stabilized by dewatering. Where dewatering is not possible stabilization of the trench floor may be accomplished by addition of crushed rock or by an alternate trench foundation.

Pressure pipe may be installed directly on the prepared trench floor as long as it is soil. The trench bottom may undulate but must support the pipe smoothly and be free of ridges, hollows, and lumps. The trench bottom should be relatively smooth and free of rock. Rocks, boulders, or large stones that can cause point loading on the pipe must be removed and the trench bottom padded with 4 to 6 inches of tamped bedding material. Bedding should consist of free-flowing material such as gravel, sand, silty sand, or clayey sand that is free of stones or hard particles larger than specified for the embedment size.

If you over-excavate the trench floor by more than 6 inches beyond grade, fill the over-excavation with acceptable material that is compacted to a density equal to that of the embedment material.

De-watering

The groundwater in the trench should be kept below the pipe invert, using deep wells, well points or sump pumps placed in the trench.

Placing Pipe in Trench

Place PE pressure pipe up to 8” in diameter in the trench by hand. Use equipment to lift, move, and lower larger diameter pipe into the trench. Pipe must not be dumped, dropped, pushed, or rolled into the trench.

Figure 23: Trench Wall Sloped for Safety

Pipe Embedment

ASTM D2774 calls for embedment materials to be sufficiently granular for haunching under the pipe and compacting. Typical soils include coarse grained soil, such as gravel or sand, or coarse grained soil containing fines, such as silty sand or clayey sand. Compactable native soil is acceptable where there is no traffic load. This includes lean clays and silty sand. The particle size should not exceed the values in Table 5.

Where the embedment is angular, crushed stone may be placed around the pipe by dumping and slicing with a shovel. Where the embedment is naturally occurring gravels, sands and mixtures with fines, the embedment should be placed in lifts not exceeding 8 inches in thickness and then tamped. Tamping should be accomplished by using a mechanical tamper. Compact to at least 85 percent Standard Proctor density as defined in ASTM D698, *Standard Test Methods for Laboratory Compaction Characteristics of Soil Using Standard Effort, (12 400 ft-lbf/ft^3 (600 kN-m/m^3))*. Under streets and roads, increase compaction to at least 95 percent Standard Proctor density.

Table 5: Embedment Size vs. Diameter of Pipe

Pipe Diameter	Particle Size
≤4”	≤1/2”
6” & 8”	≤3/4”
10” to 16”	≤1”
≥18”	≤1-1/2”

Figure 24: Typical granular embedment

Backfilling and Compaction

Backfilling should follow pipe placement and assembly as closely as possible to prevent the pipe from being shifted out of line by cave-ins, protect the pipe from external damage, eliminate pipe lifting due to flooding of open trench and lessen the possibility of backfill material becoming frozen in cold weather.

Where the in-situ soil is fine grain, backfill material should be selected to prevent material migration to or from the trench wall and other layers of embedment material.

Backfill under the pipe haunches to at least 6 inches above the pipe with the select embedment soil. Shovel slice or compact in lifts not exceeding 8” as required. Place lifts evenly on both sides of the pipe. Rock impingement may cause high contact stresses and stress raisers in pipe wall. Keep large hard objects away from the pipe. See Figure 25.

If the final backfill material contains large rock (boulder or cobble size) or clumps, then 18 inches of cushion material should be provided between the pipe crown and the trench backfill.

The final backfill may consist of the excavated material, provided it is free from unsuitable matter such as large lumps of clay, organic material, boulders or stones larger than 8 inches, or construction debris. The final backfill may be placed in the trench by machines.

There should be at least one foot of cover over the pipe before compaction of the final backfill by the use of self-powered compactors. Construction vehicles should not be driven over the pipe until a three foot cover of properly compacted material is placed over the pipe.

Where the pipe is located beneath a road, place the final backfill in lifts and compact to 95 percent Standard Proctor Density.

Fig. 25: Avoid Rock Impingement when Placing Embedment

Sunlight Exposure During Installation

Placing pipe that has been in direct sunlight in a cooler trench will result in thermal contraction of the pipe's length. This contraction can generate force which could result in pull-out at mechanical couplings or other buried structures. Allow pipe to cool before making connections to an anchored joint, flange, or a fitting that requires protection against excessive pull-out forces. Covering the pipe with embedment will facilitate cooling.

Deflection

Small diameter pressure pipes usually have adequate stiffness and are usually installed in such shallow depths that it is unnecessary to make an internal inspection of the pipe for deflection.

Cold Bend Radius

Coiled lengths and long strings of PE fused pipe may be cold bent in the field. The allowable bend ratio is determined by the pipe diameter (D) and the dimension ratio (DR). See Figure 26 and Tables 6 and 7.

Figure 26: Bend Radius, R

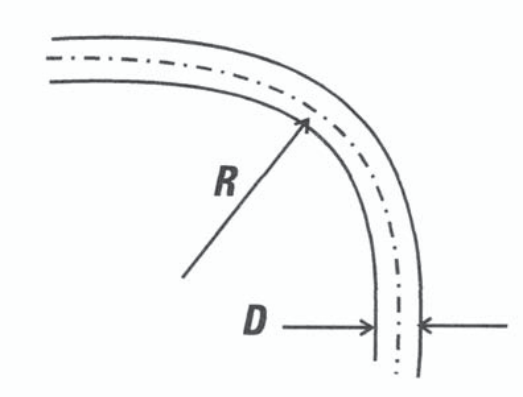

TABLE 6: Minimum Bend Radius for PE Pipe Installed in Open Cut Trench

Dimension Ratio (DR)	Minimum Cold Bend Radius "R"
7 through 9	20 X Pipe Outside Diameter
11 through 13.5	25 X Pipe Outside Diameter
17 through 21	27 X Pipe Outside Diameter
Fitting or Flange in Bend, any DR	100 X Pipe Outside Diameter

TABLE 7: Minimum Bend Radius and Length to Make a 90-degree Bend Examples

DIPS DR 17 Size	Minimum Bend Radius "R" (feet)	Length Needed for 90-Degree Bend (feet)
4	10	16
6	15	23
8	20	31
10	24	40
12	29	45

Because fittings and flange connections are rigid compared to the pipe, the minimum bend radius is 100 times the pipe's outside diameter (OD) when a fitting or flange connection is present in the bend. The bend radius should be limited to 100 x OD for a distance of about 5 times the pipe diameter on either side of the fitting location

Field bending involves excavating the trench to the desired bend radius, then sweeping or pulling the pipe string into the required bend and placing it in the trench. Temporary restraints may be required to bend the pipe and to maintain the bend while placing the pipe in the trench and placing initial backfill. Temporary blocks or restraints must be removed before installing final backfill, and any voids must be filled with compacted initial backfill material. Considerable force may be required to field bend the pipe, and the pipe may spring back forcibly if the restraints slip or are inadvertently released while bending. Observe appropriate safety precautions during field bending.

Special Details for Valves and Hydrants

Figure 27: Typical Assembly and Support Arrangement for PE Pipe Connections to Valves and Hydrants

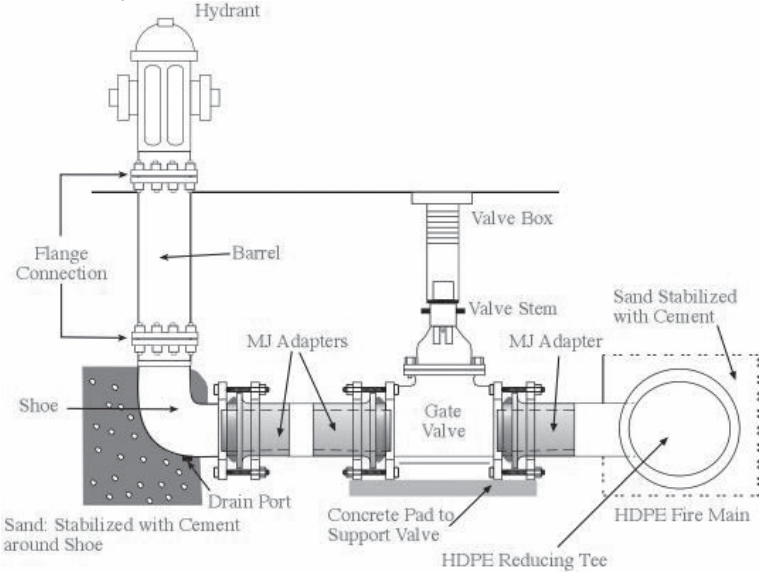

Figure 27 shows a PE self-restrained mechanical joint (MJ) adapter being used to connect to the valve. When large reducing tees or equal tees are used, MJ adapters, flanges or electrofusion couplings should be fused to the reducing tees before it is placed in the trench. The direct connection of long pipe sections or valves can create bending loads on the leg of the reducing tee. The use of PE MJ adapters, flanges or electrofusion couplings on the reducing leg of the tee makes installation of reducing tees easier and safer while preventing stresses on the tee.

Fusion

Generic Butt Fusion Joining Procedure

This procedure is intended for butt fusion joining of PE potable water, sewer and industrial pipe manufactured in accordance with ASTM F714, ASTM D3035, AWWA C901 and AWWA C906

To butt fuse PE pipe follow these simple steps to heat and fuse the ends of two pipes together to form a leak free bond that is as strong or stronger than the pipe itself. After the pipe ends are prepared by clamping and facing, the ends are put in contact with a heater until a certain size bead is formed, as shown in Figure 28. The heater is removed and pipe ends are brought together with a force specified to form the fusion bead, as shown in Figure 29. This force must be maintained until the pipe joint has cooled.

Figure 28: Butt Fusion Bead Formation

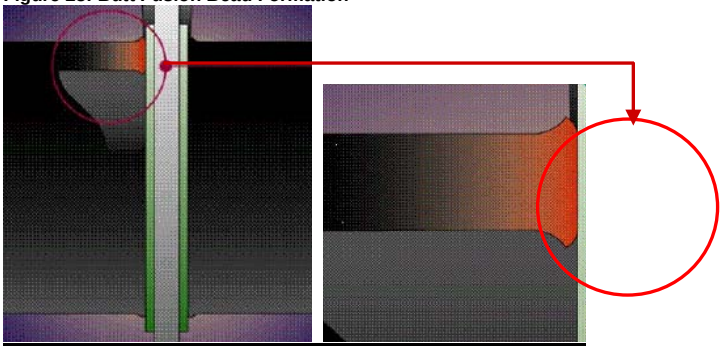

Figure 29: Butt Fusion Proper Bead Appearance

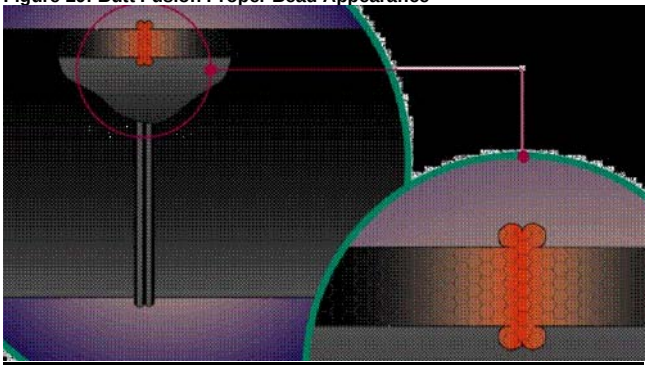

Machine and Operator Qualification

The selected fusion equipment and qualified operators shall be capable of meeting all parameters of the job. The equipment shall have jaws or reducing inserts designed to properly hold the size of the pipes being fused, and it shall have enough hydraulic force to reach the required fusion pressure during all fusion conditions. The fusion operator shall be thoroughly familiar with and trained on the equipment being used. See PPI TN-42 *Recommended Minimum Training Guidelines for PE Pipe Butt-Fusion Joining Operators or Municipal and Industrial Projects (2009).* Such training shall include at least the following:

- Safety;
- Operator's manual & checklist;
- Basic maintenance and troubleshooting;
- External power requirements;
- Features;
- Components and how they operate;
- Hydraulic operation (if applicable);
- Determining required fusion pressure and how to set on machine;
- Heater operation and temperature requirements and adjustment; and
- Data logging device (if applicable).

Job Set–up Guidelines

Weather Guidelines: Successful butt fusions can be accomplished in a broad range of weather temperatures. Pipe ends and the fusion equipment must be dry and sheltered from rain and wind.

PE pipe has very good impact resistance even in sub-freezing conditions; however, its impact strength is reduced at low temperature. Do not drop pipe in sub-freezing conditions. When temperatures are below -4ºF (-20ºC), butt fusion generally requires portable shelters or trailers or other suitable protective measures with auxiliary heating. Here are some general guidelines to address different weather conditions:

Cold Temperatures, Down to 32ºF (0ºC)

When butt fusing PE pipe under these conditions, set up a temporary wind barrier around the operator and fusion equipment. Close the pipe ends off with end caps or other means to prevent the flow of cold air.

Figure 30: Extreme Weather Protection

Cold Ambient Temperatures Below 32ºF (0º C)

Pre-heat pipe ends using a heating blanket or warm air device. Alternatively, with pipe mounted in the fusion machine, position the pipe ends within ¼ to ½ inch of the heater plate face to allow the pipe ends to warm for 30 seconds to 2 minutes, depending on the pipe size and wall thickness. Before starting pipe fusion, the operator needs to ensure that the ID of the pipe is clear of moisture due to frost that is being melted.

The use of direct application open flame devices, such as torches, for heating PE pipe is unacceptable due to the lack of adequate heating control and the possibility of oxidative damage to the pipe ends and even ignition of the pipe. The warming temperature should not exceed 120°F.

Warm (Hot) Environment (to 120º F)

Shade the operator and the equipment where ambient temperature is very high.

Wind

Wind striking the fusion heater plate and pipe can cause unacceptable temperature variations and possible joint contamination during butt fusion. In windy conditions, use a suitable shelter to protect the pipe and the fusion heater plate. High winds can also cause flow through the pipe bore. Plug or cover pipe ends to prevent this.

Additional Considerations

When PE pipe and fittings expand or contract with changes in temperature make necessary adjustments.

Make sure pipes to be clamped in the fusion machine are dry, clean and free of ice, frost, snow, dirt and other contamination.

When butt fusion is done in cold weather, DO NOT INCREASE THE HEATING TOOL SURFACE TEMPERATURE. THE REQUIRED SURFACE TEMPERATURE MUST BE BETWEEN 400 - 450°F. The optimum temperature is 425°F.

Some butt fusion equipment and supporting generators use motor and hydraulic oils. Follow operator's manuals to make necessary viscosity adjustments.

In cold conditions, it will take longer to develop the initial melt bead completely around the pipe ends, especially on large diameter pipe. On larger pipe sizes, fusion pressure must be maintained until a slight melt is observed around the entire circumference of the pipe or fitting before releasing pressure to the heat soak cycle. DO NOT increase pressure during the heat soak cycle. When proper melt has been obtained, the pipe and heater shall be separated in a rapid, snap-like motion. The melted surfaces shall then be joined immediately in one smooth motion so as to minimize cooling of the melted pipe ends.

Pipe Stands and Supports

Use pipe support stands when butt fusing lengths of pipe. Position pipe support stands on either side of the fusion machine approximately 20' from the pipe ends. Adjust the height of the stands so that the pipes are level. The more stands that are used the more freely the pipes move into and through the fusion machine. Other devices such as carts, racks, etc. can be used to aid in supporting and feeding pipes.

Butt Fusion Parameters per ASTM F2620

Fusion Interface Pressure Range: 60 - 90 psi (4.14 - 6.21 bar)
Heater Surface Temperature Range: 400 - 450°F (204 - 232°C)

Figure 31: Butt Fusion of Water Pipe

Butt Fusion Procedure

1. Clean and securely fasten the components to be joined.
2. Face the pipe ends.
3. Align the pipe profile.
4. Melt the pipe interfaces.
5. Join the two profiles together.
6. Hold under pressure until cool.
7. Visually inspect the joint.

Clean and Secure

Clean the inside and outside of the pipe to be joined by wiping with a clean lint-free cloth. Remove all foreign matter. Extend enough pipe through the inner jaws to allow the facer to cut and clean up the surface (see equipment manufacturer's manual for recommendations). Clamp the components in the machine. Check alignment of the ends and adjust as needed.

Figure 32: Pipe Cleaned and Secured for Butt Fusion

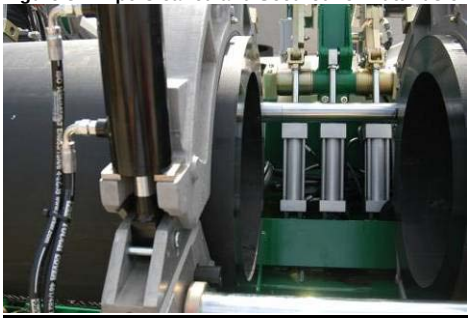

Face

The pipe ends must be faced to establish clean, parallel mating surfaces. Most equipment manufacturers have incorporated a rotating planer block in their facers to accomplish this goal. Install the facer in the fusion machine and move the pipe ends against the facer. Facing is continued until a minimal distance exists between the fixed and movable jaws of the machine and the facer is locked firmly and squarely between the jaw bushings. Open the jaws and remove the facer. Remove any pipe chips from the facing operation and any foreign matter with a clean, lint-free cotton cloth. Bring the pipe ends together with minimal force and inspect the face off. A visual inspection of this operation should verify that faces are square, perpendicular to the pipe centerline on each pipe end and with no detectable gap.

Figure 33: Facing of Pipe

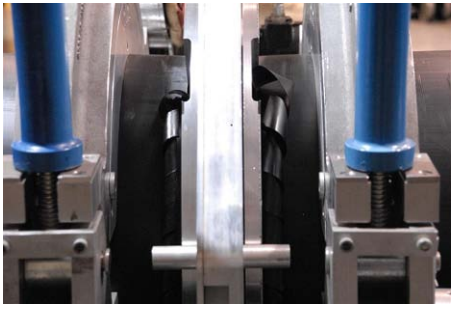

Align

The pipe profiles must be rounded and aligned with each other to minimize mismatch (high-low) of the pipe walls. This can be accomplished by tightening clamping jaws until the outside diameters of the pipe ends match. Always tighten the high side down to achieve alignment. The jaws must not be loosened or the pipe may slip during fusion. Re-face the pipe ends if excessive adjustment is required and remove any chips from re-facing operation with a clean, lint-free cotton cloth.

Figure 34: Aligning Pipe Ends for Fusion

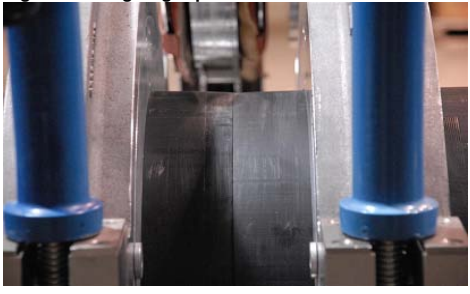

Melt

Heating tools that simultaneously heat both pipe ends are used to accomplish this operation. These heating tools are normally furnished with thermometers to measure internal heater temperature so the operator can monitor the temperature before each joint is made. However, the thermometer can be used only as a general indicator because there is some heat loss from internal to external surfaces, depending on factors such as ambient temperatures and wind conditions. A pyrometer or other surface temperature-measuring device should be used before the first joint of the day is made and periodically throughout the day to ensure proper temperature of the heating tool face that contacts the pipe or fitting ends. Additionally, heating tools are usually equipped with suspension and alignment guides that center them on the pipe ends.

The heater faces that come into contact with the pipe should be clean, oil-free and coated with a nonstick coating or covered with a non-stick fabric as recommended by the fusion equipment manufacturer to prevent molten plastic from sticking to the heater surfaces. Remaining molten plastic can interfere with fusion quality and must be removed according to the tool manufacturer's instructions. Never use chemical cleaners or solvents to clean heating tool surfaces.

Figure 35: Melting of Pipe for Fusion

The surface temperatures must be in the temperature range 400 – 450°F (204 – 232°C). Install the heater in the butt fusion machine and bring the pipe ends into full contact with the heater at fusion pressure to ensure that full and proper contact is made between the pipe ends and the heater. After holding the pressure very briefly, it should be released without breaking contact. On larger pipe sizes, fusion pressure must be maintained until a slight melt is observed around the circumference of the pipe before releasing pressure. Continue to hold the components in contact with each other, without force, while a bead of molten polyethylene develops between the heater and the pipe ends. When the proper bead size is formed against the heater surfaces all around the pipe or fitting ends, remove the heater. Melt bead size is dependent on pipe size. See Table 8 for approximate melt bead sizes.

TABLE 8: Approximate Melt Bead Size

Pipe Size Approximate	Melt Bead Size
1 ¼" and smaller (40mm and smaller)	1/32" – 1/16" (1 – 2mm)
Above 1 ¼" through 3" (above 40mm – 90mm)	about 1/16" (2mm)
Above 3" through 8" (above 90mm – 225mm)	1/8" – 3/16" (3-5mm)
Above 8" through 12" (above 225mm – 315mm)	3/16" – 1/4" (5-6mm))

Join

After the heater tool is removed, quickly inspect the pipe ends (NOTE: If a concave melt surface is observed, unacceptable pressure during heating has occurred and the joint will be low quality. Do not continue. Allow the component ends to cool completely, and restart at the beginning. Except for a very brief time to seat the components fully against the heater tool, do not apply pressure during heating), if acceptable, immediately bring the molten pipe ends together with sufficient fusion force to form a double rollback bead against the pipe wall. On hydraulic machines, apply the required fusion pressure as calculated below.

For larger manual and hydraulic butt fusion machines, fusion force is determined by multiplying the interfacial pressure, 60 – 90 psi (usually 75 psi), by the pipe area.

For manually operated fusion machines, a torque wrench may be used to apply the proper force. For hydraulically operated fusion machines, the fusion force can be divided by the total effective piston area of the carriage cylinders to give the theoretical fusion pressure in psi. Internal and external drags need to be added to this figure to obtain the actual fusion machine gauge pressure. The hydraulic gauge reading is dependent upon pipe diameter, DR and machine design. Interfacial pressure and gauge reading are not the same value.

Figure 36: Joining of Pipe by Butt Fusion

Hold

Hold the joint immobile under fusion force until the joint has cooled adequately to develop strength. Allowing proper cooling times under fusion force prior to removal from the clamps of the machine is important in achieving joint integrity. The fusion force should be held between the pipe ends for approximately 30 – 90 seconds per inch of pipe diameter or until the surface of the melt bead is cool to the touch. Use 90 seconds per inch of pipe diameter for the cool time with pipes that have a wall thickness of 1 ½ inches or greater.

Remove the pipe from the fusion machine and avoid rough handling for an additional 30 minutes.

Inspect

Visually inspect and compare the joint against the appearance guidelines that follow (refer to figures 37-42). Visually, the width of butt fusion beads should be approximately 2 – 2 ½ times the bead height above the pipe; the beads should be rounded and uniformly sized around the pipe circumference. The v-groove between the beads should not be deeper than half the bead height above the pipe surface. When butt fusing to molded fittings, the fitting-side bead may display shape irregularities such as minor indentations, deflections and non-uniform bead rollover from molded part cooling and knit lines. In such cases, visual evaluation is based mainly on the size and shape of the pipe-side bead. (See Figure 37 for bead configuration). Visually unacceptable joints should be cut out and re-fused using the correct procedure. (See manufacturer's visual inspection guidelines.)

A datalogging device can be attached to the hydraulic fusion machines to record the critical areas of the butt fusion process. This data can be reviewed before allowing the joint to be buried to make sure the proper fusion procedure was followed by the operator. This information can be downloaded to a PC as a permanent record of the joints on a job. The datalogging of each joint on a job can be specified as a QA requirement.

Figure 37: Acceptable and Unacceptable Bead Cross-Sections

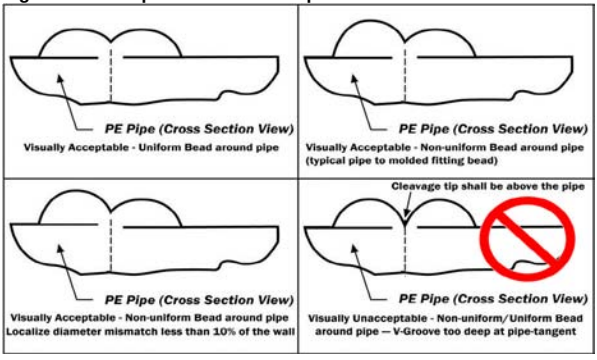

Figure 38: Unacceptable butt fusion joint due to incomplete facing operation

Figure 39: Unacceptable butt fusion joint due to contamination captured in the joint

Figure 40: Acceptable butt fusion joint

Figure 41: Unacceptable cupped surfaces after heat soak cycle

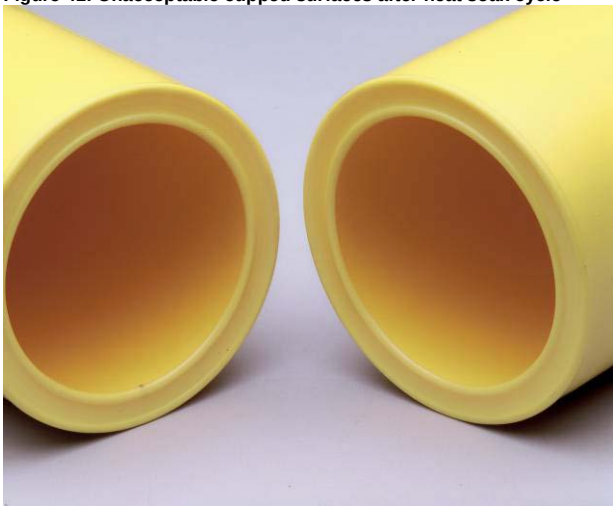

Cupped surfaces are unacceptable after the heat soak cycle. They are usually caused by applying pressure during the heat soak cycle.

Figure 42: Visually unacceptable mitered joint

Visually mitered (angled, off-set) joints should be cut out and re-fused (straight or coiled pipe).

Coiled pipe is available in sizes through 6” IPS. Coiling may leave a bend in some pipe sizes that must be addressed in the preparation of the butt fusion process. There are several ways to address this situation:

- Straighten and re-round coiled pipe before the butt fusion process.
- If there is still curvature present, install the pipe ends in the machine in an “S” configuration with print lines approximately 180° apart in order to help gain proper alignment and help produce a straight joint. See Figure 8.
- If there is still a curvature present, another option would be to install a straight piece of pipe between the two coiled pipes.
- Every effort should be made to make the joint perpendicular to the axis of the pipe.

Figure 43: Alignment of Coiled Pipe Ends Through a Butt Fusion Machine

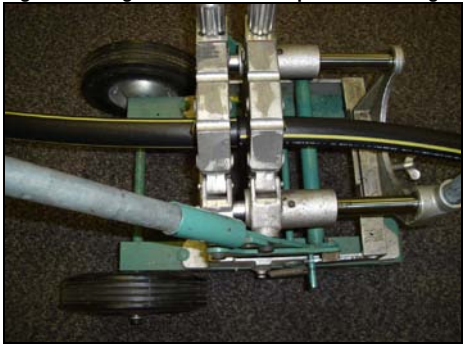

Generic Saddle Fusion Joining Procedure of PE Pipe Mains 1 ¼" IPS and Larger

Photographs describing the steps of this procedure along with photos of acceptable and unacceptable fusions are included.

TABLE 9: Generic Saddle Fusion Parameters for Pressurized PE Water Pipes

Heater adapter surface temperature	500 ± 10°F
Initial interfacial pressure	60 ± 6 psi
Heat soak interfacial pressure	0 psi
Fusion interfacial pressure	30 ± 3 psi
Total heating time on main: 1¼" IPS pressurized main	15 seconds maximum
Total heating time on main: 2" IPS pressurized main	25 to 30 seconds maximum
Total heating time on main: all 3" and larger mains and 1¼" and 2" IPS non-pressurized mains	Look for a 1/16" bead around the base of the fitting

Look in the lower right hand corner of the fitting label for the forces required for that fitting (Initial Heat Force / Heat Soak Force / Fusion Force) (example 180/0/90).

Terminology

Initial Heat (Bead-up) - The heating step used to develop an initial melt bead on the main pipe.

Initial Heat Force (Bead-up force) – The force (pounds) applied to establish an initial melt pattern on the main pipe. The Initial Heat Force is determined by multiplying the fitting base area (sq. inches) by the initial interfacial pressure (pounds per square inch)

Heat Soak Force – The force (pounds) applied after an initial melt pattern is established on the main pipe. The Heat Soak Force is the minimum force (essentially zero pounds) that ensures that the fitting, heater and main stay in contact with each other.

Fusion Force – The force (pounds) applied to establish the fusion bond between the fitting and the pipe. The Fusion Force is determined by multiplying the fitting base area (square inches) by the fusion interfacial pressure (pounds per square inch).

Total Heat Time – A time that starts when the heater is placed on the main pipe and initial heat force is applied and ends when the heater is removed.

Cool Time – The time required to cool the joint to approximately 120°F (49°C). The fusion force must be maintained for 5 minutes on 1¼" IPS or 10 minutes for all other main sizes, after which the saddle fusion equipment can be removed. The joint must be allowed to cool undisturbed for an additional 30 minutes before tapping the main or joining to the branch outlet.

Interfacial Area for Rectangular Base Saddle Fittings

Area = (width of saddle base X length of saddle base) – hole area

Hole area = 3.14 X (hole diameter)^2 / 4

Interfacial Area for Round Base Fittings

Area = saddle base area – hole area

Saddle base area = 3.14 X (saddle base diameter)^2 / 4
Hole area = 3.14 X (hole diameter)^2 / 4

Fitting Label – The initial heat force, heat soak force and the fusion force will be listed in the lower right hand corner of the fitting label for all saddle fusion fittings; this will eliminate the need to calculate the fusion forces in the field (e.g. 180/0/90).

Generic Saddle Fusion Procedure

Figure 44: Fusion steps are illustrated with yellow pipe for better visibility; PE Water Pipe is typically black

Prepare Fusion Machine

This procedure requires the use of a Saddle Fusion Tool. This tool must be capable of holding and supporting the main, rounding the main for good alignment between the pipe and fitting, holding the fitting, applying and indicating the proper force during the fusion process.

Install the Saddle Fusion Tool on the main according to the manufacturer's instructions. The tool should be centered over a clean, dry location where the fitting will be fused. Secure the tool to the main. A main bolster or support is recommended under the pipe on 6" IPS and smaller main pipe sizes.

Abrade the fusion surface of the main with a 50-60 grit utility cloth. The abraded area must be larger than the area covered by the fitting base. After abrading, brush residue away with a clean, dry cloth.

Abrade the fusion surface of the fitting with 50 to 60 grit utility cloth; remove all dust and residue.

Insert the fitting in the Saddle Fusion Tool loosely.

Using the Saddle Fusion Tool, move the fitting base against the main pipe and apply about 100 pounds-force to seat the fitting. Secure the fitting in the Saddle Fusion Tool.

Heating

The heater must be fitted with the correct heater adapters. The temperature of the heater adapter fusion surfaces must be 490-510° F.

Place the heating tool on the main centered beneath the fitting base. Immediately move the fitting against the heater faces, apply the Initial Heat Force (see fitting label), and start the heat time.

Apply the Initial Heat Force until melt is first observed on the crown of the pipe main (Initial Heat is the term used to describe the initial heating (bead-up) step to develop a melt bead on the main pipe and usually is 3-5 seconds) and then reduce the force to the Heat Soak Force (Bead-up force) (see fitting label). Maintain the Heat Soak Force until the Total Heat Time is complete.

At the end of the Total Heat Time, remove the fitting from the heater and the heater from the main with a quick snapping action. Quickly check the melt pattern on the pipe main and fitting heated surfaces for an even melt pattern (no unheated areas). Total Heat Time ends:

a) When the Total Heating Time expires for a pressurized 1¼" IPS or 2" IPS main.

or

b) When a melt bead of about 1/16" is visible all around the fitting base for a 1¼" IPS or 2" IPS non-pressurized main, or a larger pressurized or non-pressurized main.

Fusion and Cooling

Whether or not the melt patterns are satisfactory, press the fitting onto the main pipe very quickly (within 3 seconds) after removing the heater and apply the Fusion Force (See the Fitting Label). Maintain the Fusion Force on the assembly for 5 minutes on 1¼" IPS and for 10 minutes on all larger sizes, after which the saddle fusion equipment may be removed. (Fusion Force adjustment may be required during Cool Time, but never reduce the Fusion Force during the cooling.)

The assembly should cool for an additional 30 minutes before rough handling or tapping the main. (If step 7 melt patterns were not satisfactory or if the fusion bead is unacceptable, cut off the saddle fitting above the base to prevent use, relocate to a new section of main, and make a new saddle fusion using a new fitting.)

NOTE: These procedures are based on tests conducted under controlled ambient temperature conditions. Environmental conditions on a job site could affect heating and cooling times. Regardless of job site conditions or ambient temperature, the prescribed heating tool temperature is required. Do not increase or decrease the heating tool temperature.

Note: All of the procedures in Figure 44 are based on tests conducted under controlled ambient temperature. Environmental conditions on a job site could affect heating and cooling times. Regardless of the jobsite conditions or ambient temperature, the prescribed heating tool temperature is required. Do not increase or decrease the heating tool temperature.

Figure 45 : Acceptable Fusions

ACCEPTABLE FUSIONS

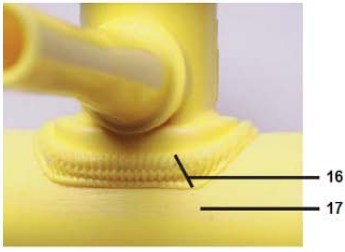

16. Proper alignment, force and melt
17. Proper pipe surface preparation

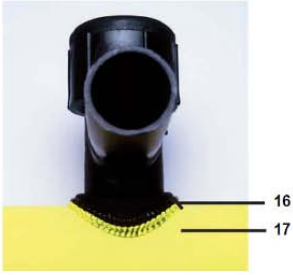

16. Proper alignment, force and melt
17. Proper pipe surface preparation

18. Melt bead below or parallel with top of fitting base

19. Material pulled from pipe when impact tested

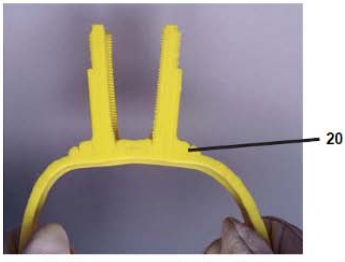

20. No gap or voids when bent

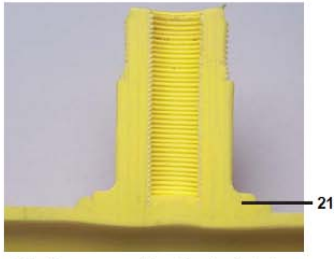

21. No gap or voids at fusion interface

Figure 46 : Unacceptable Fusions

UNACCEPTABLE FUSIONS

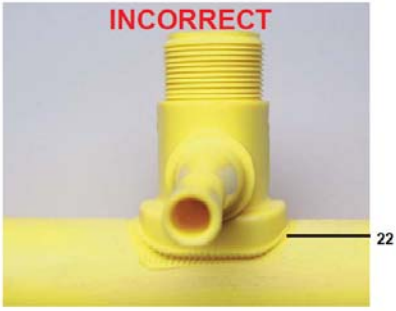

22. Insufficient melt and misaligned

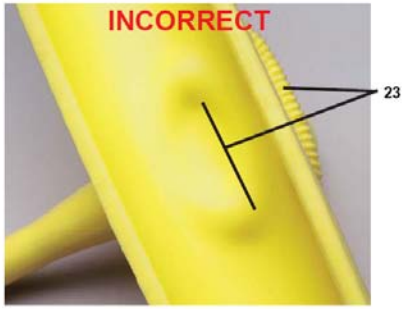

23. Excessive melt and force

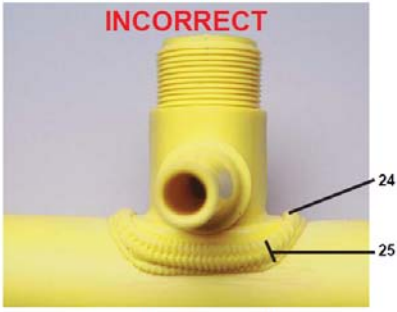

24. Bead above base of fitting
25. Excessive melt and force

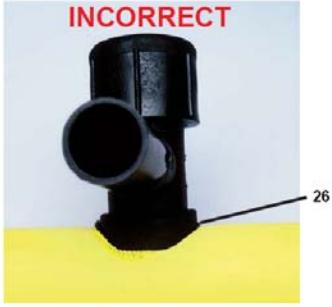

26. Insufficient melt

Electrofusion

Installation Guidelines for Electrofusion Couplings

Safety

Jobsite safety requirements should be fully understood and observed. Electrofusion fittings and equipment are not intended to be, and are not, “Explosion Proof”. If used in a volatile environment, additional ignition concerns may be present and are not addressed in this document. When moisture at the fusion site is a safety concern, connect the leads to the fitting before the control unit is powered up. Take safety precautions to prevent exposure to electrical shock hazards.

Operator Experience

Electrofusion couplings should only be installed by persons that have received training from an authorized electrofusion instructor, have a strong working knowledge of polyethylene and heat fusion, and have qualified 14” and larger electrofusion joints through destructive testing. This document is a guide only and should not be used in place of training by an authorized electrofusion instructor. Failure to follow all preparation steps can result in joint failure or leakage due to contamination or improper installation.

Destructive tests are described in ASTM F1055 and can be in the form of burst tests, bend tests, peel tests and other methods useful in determining the quality of a fusion joint.

Pre-installation Requirements

Pipe Diameter – In the absence of specific requirements from the fitting manufacturer ensure that the pipe diameter is within the tolerances, at the specified temperature, of the applicable pipe standard (ASTM F714, AWWA C906, etc.). Standard tolerances are determined at 73°F. Measure pipe diameter with a Pi Tape at 2” and 6” from the pipe end to determine diameter. Pipe toe-in or reduction in diameter is a condition that occurs at the pipe end and should be checked to ensure that the pipe diameter is within tolerance at 2” from the end. Severe toe-in may require the removal of up to one pipe diameter or 12” from the pipe end.

Figure 47: Measuring Diameter with a Pi Tape

Note: In preparing a pipe for electrofusion the pipe OD is reduced by at least .014" by scraping the outside surface. This OD reduction should be taken into consideration when accepting pipe extruded close to the above minimum tolerances.

Pipe Ovality – Determine if an ovality condition exists by measuring the pipe diameter to determine the amount of out-of-roundness. If ovality exceeds 2%, re-rounding clamps must be used.

Pipe ends should be squarely cut to 90° ± 5°. A 4" or wider sling or strap can be used as a guide to mark the pipe for cutting. A level and protractor can be used to determine the angle of the cut.

Pipe Alignment – Pipe alignment should be inspected to ensure that no stresses are present in the assembly that might cause movement during fusion.

Power Source – An adequate power source is required. Ensure that power source is capable of delivering power for entire coupling fusion time without interruption (check generator for full fuel supply). Ensure that all connections are tight and clean. Loose connections can result in arcing or blown fuses.

*110 Vol*t – A minimum 5000 watt **continuous** supply generator capable of delivering 115 volts to 135 volts at 45 Hz to 66 Hz to the control box. Use a minimum 30 amp breaker with "slow blow" or time delay fuse and a 30 amp twist-lock NENA L5 receptacle.

220 Volt – A minimum 5000 watt **continuous** supply generator capable of delivering 180 volts to 300 volts at 45 Hz to 65 Hz to the control box. Use a minimum 30 amp breaker with "slow blow" or time delay fuses and a 15 amp twist-lock NEMA L6 receptacle.

Note: Commercially available generators capable of meeting these requirements are usually in excess of 7500 watt capacity and need to be in good working order.

Extension Cords – Typically, a single extension of up to 50' is permitted between the generator and the control box. The minimum wire gauge is 10/3 awg for extension lengths up to 50'. Longer lengths may be allowed; consult the fitting and equipment manufacturer for specific recommendations.

Control Box – A 24 digit barcode compatible control box conforming to ISO 12716 must be used to deliver the required energy to the coupling. The control box must be capable of delivering 80 amperes at 40 volts output. The control box must be capable of reading the coupling barcode and applying the correct fusion parameters, including automatic temperature compensation, to the fitting without operator intervention. The control box must be capable of reading ambient temperatures at the fusion site.

Scraping Tools – PIPE PREPARATION IS VERY CRITICAL TO THE ELECTROFUSION PROCESS. CAREFUL ATTENTION MUST BE GIVEN TO PROPER CLEANING AND SCRAPING PROCEDURES TO REMOVE CONTAMINATION AND SURFACE OXIDATION FROM THE PIPE SURFACE. Ensure that only mechanical type scraping tools designed specifically for electrofusion preparation are used to prepare the pipe surface. Do not use abrasives such as grinders, emery cloth, or sandpaper.

Markers – Ensure that insertion depth and pipe scrape area markings are made with a non-greasy, non-petroleum based, fast-drying, permanent marker or paint pen.

Cleaning Agent / Wiping Cloth – A clean, dry, non-dyed, lint free cloth is used to clean pipe surfaces. 96% or higher Isopropyl alcohol without additive, except water, is recommended as a cleaning agent. Pre-impregnated wipes without additives may also be suitable. Denatured alcohol may contain other impurities and is not suitable for use with electrofusion. Under no circumstances should a coupling fusion be made with any liquid (water, oil, sewage, etc.) flowing through the pipe or fusion area; fusion joint failure and possible electrical hazards could occur. The fusion zone must be clean and dry before and during fusion.

Weather Conditions – Observe manufacturer's recommended minimum and maximum installation temperatures for electrofusion fittings.

The typical installation temperature range is -4°F to 120°F (-20ºC to 49ºC), but can vary above and below that range depending on the manufacturer. If ambient temperatures are outside this range, consult the equipment and fitting manufacturer for a specific recommendation. Large diameter couplings may use a temperature specific fusion time or a pre-heat cycle prior to fusion. Protect the fusion site in case of inclement weather such as rain or snow.

Figure 48: Electrofusion Preparation: Keep Pipe Warm and Protected

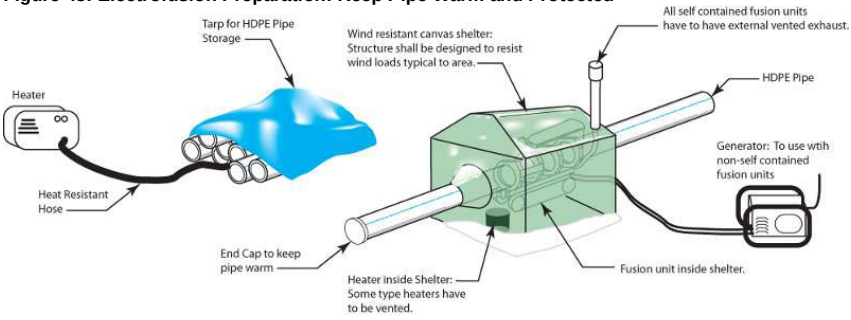

Installation Procedure

1. Clean pipe ends to remove dirt, mud, and other debris from pipe ends. Clean water can be used for initial cleaning prior to scraping; however, the pipe surface must be clean and dry before scraping. Check pipe surface and remove any embedded debris that may cause damage to scraping tools. PIPE PREPARATION IS VERY CRITICAL TO THE ELECTROFUSION PROCESS. CAREFUL ATTENTION MUST BE GIVEN TO PROPER CLEANING AND SCRAPING PROCEDURES TO REMOVE CONTAMINATION AND SURFACE OXIDATION FROM THE PIPE SURFACE.

Figure 49: Clean Pipe Ends Thoroughly

2. Ensure that the pipe end has a square and even cut as close to 90° as possible. A sling or strap can be used as a guide for marking pipe ends for straight cutting.

Figure 50: Cut Pipe Ends Square

3. Measure the total length of the coupler to be installed. Make a mark (with recommended marker) from the pipe end that is half the total length of the coupler. This mark is for stab depth purposes and will ensure that the pipe end is inserted into the center of the coupler.

Figure 51: Mark Insertion Depth on the Pipe

4. Measure the pipe ovality. The High/Low diameter difference should not exceed 2%. If required, place a re-round clamp immediately outside the stab depth mark. Do not scrape to remove high sides of oval pipe in order to relieve ovality.

Figure 52: Cut Pipe Ends Square

Measure for highest and lowest diameter points; use re-round clamps if necessary. Use either a commercially available re-rounding device (Figure 53), or substitute full-encirclement-type metal rings (Figure 54).

Figure 53: Commercial Re-Rounding Device

Figure 54: Re-Rounding with Full-Encirclement Ring

5. Scrape the outside of the pipe surface to remove oxidation and other contaminants. Use a mechanical type scraping tool designed specifically for electrofusion preparation to remove at least .014" (0.36 mm) from the pipe OD. Scrape the pipe surface until an outer layer or "skin" has been removed to expose clean, virgin pipe material. Inspect the entire circumference of the scraped area to ensure total scraping coverage. Do not touch the scraped surface with your hands because it may introduce surface contamination. Scraped pipe should conform to the dimensional recommendations of the fitting manufacturer. Do not use abrasives such as grinders, emery cloth, or sandpaper.

Figure 55: Scraping

6. Do not touch the scraped pipe surface or the inside of the coupler as body oils and other contaminates will compromise fusion joint performance. If the surfaces become contaminated, clean thoroughly with a clean lint-free towel and 96% isopropyl alcohol and allow to dry before assembling. Do not use alcohol with any additives other than water. CAUTION: TO AVOID ALL POSSIBLE RECONTAMINATION OF THE COUPLING AND PREPARED PIPE SURFACES DO NOT TOUCH THE FUSION SURFACES.

7. If coupler is to be pushed completely over one pipe end, scrape the pipe end for the entire length of the coupler to prevent contamination of the coupler by sliding over un-scraped pipe.

8. Install coupler onto the pipe ends so that the stab depth marks are aligned at the outer edges of the coupler. The pipe ends may be beveled to allow for easier insertion into the coupling. If necessary, use a rubber mallet (or metal hammer and wood blocks) to move coupler onto pipe. Re-round clamps can be used as anchors for pulling couplers onto pipe with mechanical assist devices such as a hand winch. Use care not to damage internal wire or terminal pins. Leave plastic bag over coupler to prevent contamination and debris from entering the open end.

Figure 56: Installing Coupler on Pipe

9. Check pipe end alignment to ensure that there is no bind or stress exerted on the coupling before or during fusion and until cooling time has elapsed. Support for the pipe and coupling may be necessary to prevent stresses or sagging that may develop as heat is applied during fusion.

10. Make sure the generator is operating normally before powering the control box. Connect the control box leads to the coupler. Make sure that all connections and lead adapter tips are properly sized and secure.

11. Scan the barcode to set the fusion time. Ensure that label information conforms to scanned data. Observe the manufacturer's procedure for pre-heating or temperature specific fusion time. Start the fusion process. Do not leave unattended. Depending on the coupling manufacturer, some couplings have multiple barcodes that correspond to the ambient temperature or a separate pre-heat barcode that is used prior to fusing the coupling. Follow the manufacturer's recommendation for scanning the proper barcode. Under no circumstances should a coupling fusion be made with any substance flowing through the pipe or fusion area; fusion joint failure and possible electrical hazards could occur. The fusion zone should be clean and dry before and during fusion.

Figure 57: Scanning the Bar Code

12. After the fusion cycle is complete, verify fusion cycle completion is normal. Check melt indicators if the coupling is so equipped. Note the cooling time and mark the time when the clamping time has elapsed on the pipe. Additional information such as fusion record ID number, control box serial number, etc. should also be recorded if required. For couplers with dual fusion zones, repeat for both ends of the coupler.

Figure 58: Recording the Electrofusion Information

If a fusion cycle fault occurs, note the error code displayed by the control box and proceed according to the manufacturer's recommendation. In case of power interruption (i.e. generator runs out of gas, leads are disconnected or any other power interruption failure) consult the manufacturer's instructions for re-fusion. Faults caused by any other circumstances should not be re-fused.

13. Backfill and handling can be completed after the recommended minimum cooling time has elapsed. The recommended cooling time is displayed by the control box after the fusion cycle completes or can be found on the coupler label. Pressure leak testing can be conducted after the recommended cooling time plus one hour has elapsed.

Examination

The following are illustrations of acceptable and unacceptable electrofusion joints:

Figure 59: Good Fusion Joint – Fully Acceptable

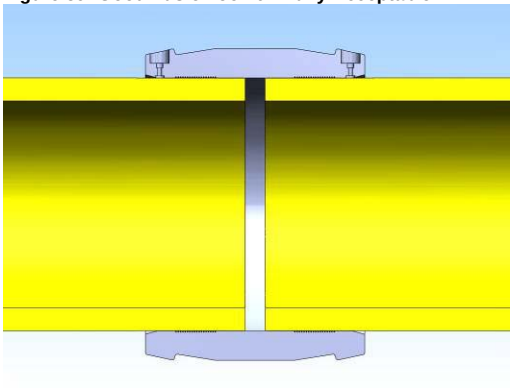

Figure 60: Melt Out Unacceptable – Possible Causes: Pipe Ovality, Flat Spots, Undersized Pipe and Binding

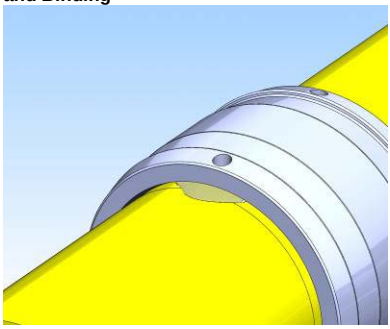

Figure 61: Exposed Wire Unacceptable – Possible Causes: Pipe Ovality, Flat Spots, Undersized Pipe and Binding

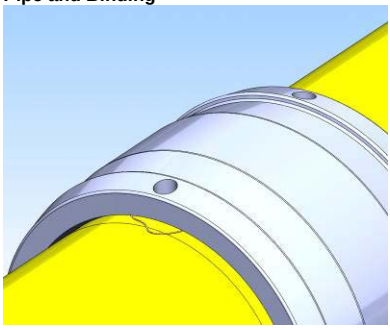

Figure 62: Short Stab Unacceptable – Possible Cause: Failure to Mark and Monitor Stab Depth

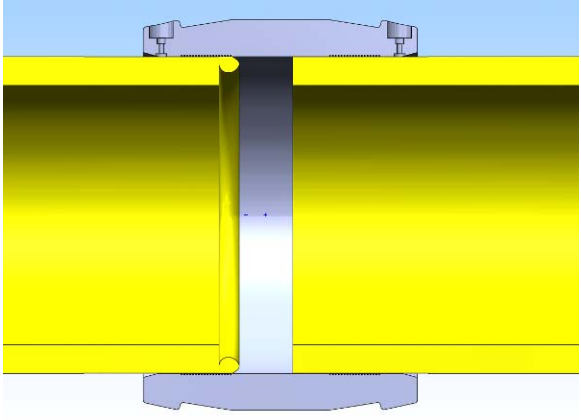

Figure 63: Mis-Stab Unacceptable – Possible Cause: Failure to Mark and Monitor Stab Depth

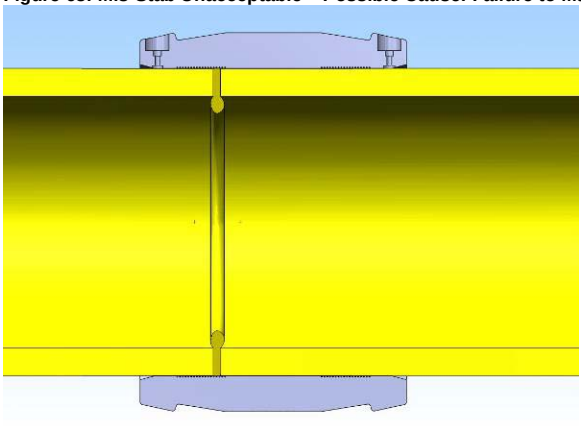

Figure 64: Misalignment Unacceptable – Possible Cause: Inadequate Clamping or Restraint during Fusion

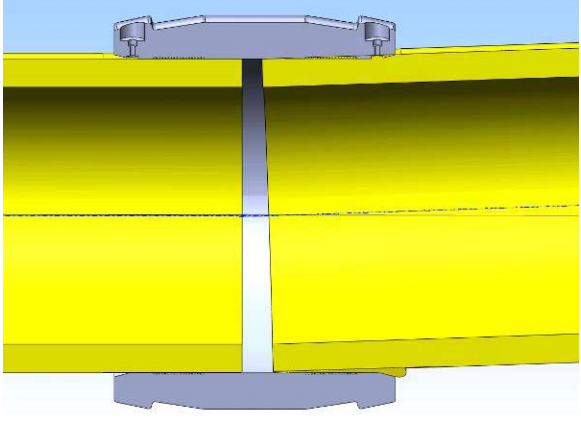

Figure 65: Mis-cut Unacceptable – Possible Cause: Failure to cut Pipe End Perpendicular to the Axis of the Pipe

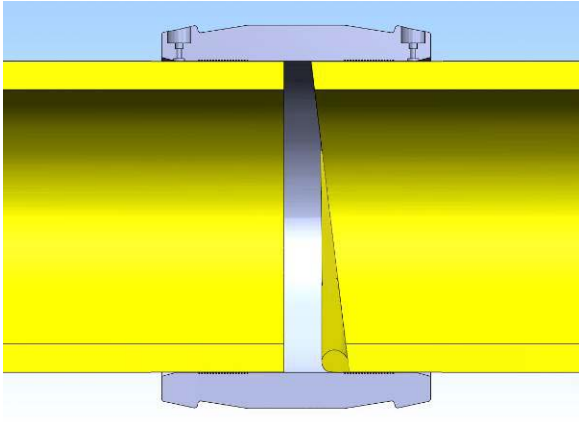

Figure 66: Gouges and Scratched Unacceptable – Possible Cause: Damage during Transportation or Handling of the Pipe

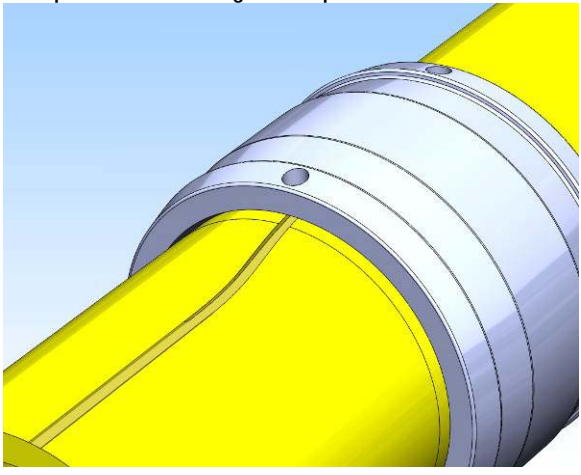

Figure 67: Poor Scrape Unacceptable – Possible Causes: Incorrect Scraper, Poorly Maintained Scraper, Inadequate Number of Passes with Scraper and Ineffective Evaluation of Scraping

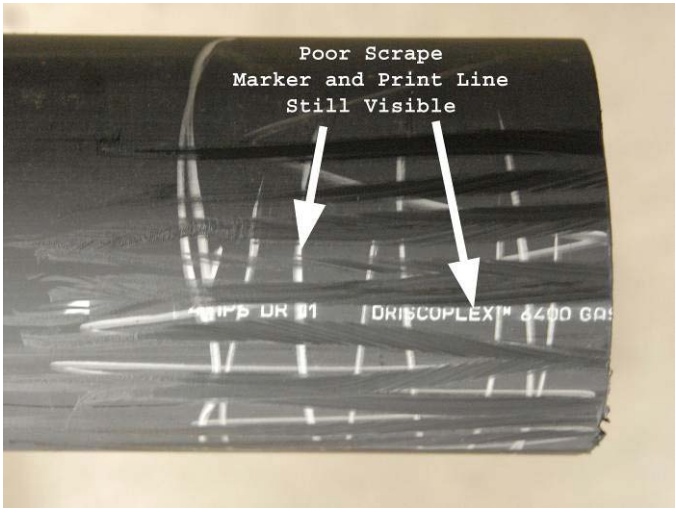

Figure 68: Poor Scrape Unacceptable – Possible Causes: Incorrect Scraper, Poorly Maintained Scraper, Inadequate Number of Passes with Scraper and Ineffective Evaluation of Scraping

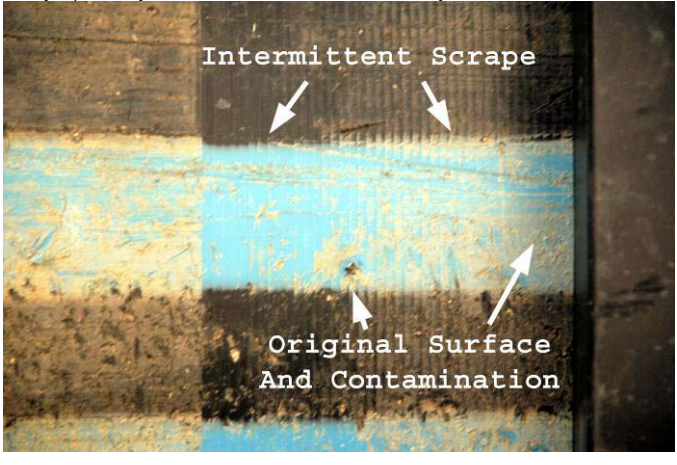

Figure 69: Over Scrape Unacceptable – Possible Causes: Incorrect Scraper, Poorly Maintained Scraper, Excessive Number of Passes with Scraper and Ineffective Evaluation of Scraping

Figure 70: Pipe Flat Spots Unacceptable – Possible Cause: Damage during Transportation or Handling of the Pipe.

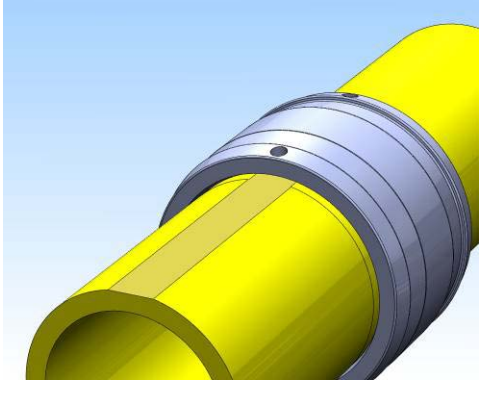

Figure 71: Pipe Flat Spots Unacceptable – Possible Cause: Damage during Transportation or Handling of the Pipe.

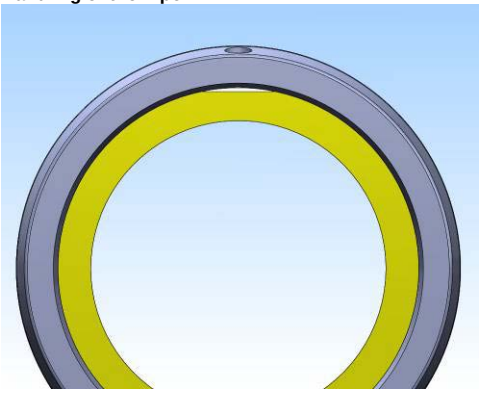

Figure 72: Pipe Out of Round Unacceptable - Possible Causes: Transportation or Storage Damage.

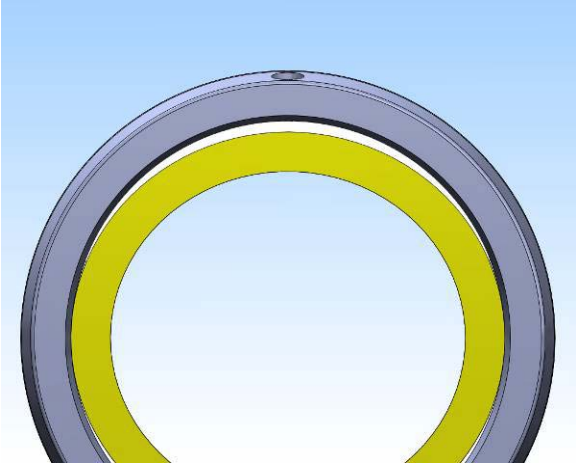

See PPI Publication TN-34 for detailed instructions for:

- Measuring Diameter with a Pi-Tape
- Reading a Pi-Tape
- Marking Pipe Ends for Square Cuts
- Cutting Pipe Ends

Transitions to Non-PE piping

Refer to PPI TN-36 *Connecting HDPE Water Pipe to DI and PVC Piping Systems (2006)* for additional details.

MJ Adapter Connections to DI Fittings

MJ (mechanical joint) Adapters are manufactured in standard IPS and DIPS sizes for connecting IPS sized or DIPS sized polyethylene pipe to mechanical joint fittings and appurtenances that meet AWWA C111/ANSI A21.11. When connected, they seal against leakage and restrain against pullout. No additional external clamps or tie rod devices are required unless connected to an existing piping system.

In water systems that use ductile iron pipe (DIP), many valves are connected to pipe using MJ Adapters. A typical MJ Adapter Kit is shown below in Figures 73 through 75.

Figure 73 : HDPE MJ Adapter Kit

Figure 74: MJ connection to typical gate valve with MJ ends

Figure 75: MJ Connection to DI fitting

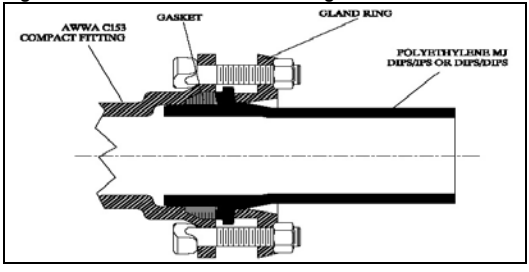

Refer to the fitting manufacturer's installation instructions for joining MJ Adapters to DI Fittings. In general, the procedure is to first attach the HDPE MJ Adapter to the HDPE pipe line. Slip the Gland Ring over the pipe end and then butt fuse the HDPE MJ Adapter to the end of the pipe using the *Generic Butt Fusion Joining Procedure*. Install the Gasket over the MJ Adapter and align the fitting with the socket hub of the ductile iron fitting. Lubricate the gasket, the end of the MJ adapter, and the inside of the socket hub with an approved pipe lubricant meeting AWWA C111. Do not use soapy water. Insert the MJ Adapter into the socket hub. Make sure it is evenly and completely seated in the socket hub. The MJ Adapter and the socket hub must be aligned straight into each other. Insert the gland bolts and run the nuts up finger-tight. Tighten the gland bolts evenly to the fitting manufacturer's recommended procedures. This connection is used with a large number of DI fittings, some of which are shown in Figure 76.

Figure 76: Ductile Iron MJ Fittings

When connecting to a valve with an MJ connection, longer T-Bolts may be required. If the T-Bolts that come with the kit are not long enough for the assembly, use a coupling nut and Grade 5 all thread to make up the length required (Figure 77)

Figure 77 T-Bolt Extension

Flanged Connection to DI Fittings

Use a flanged connection to join HDPE pipe to HDPE pipe in a close quarter tie-in or when a piping section will require removal in the future. Flanged joints are also used to attach HDPE pipe to valves or DI fittings. The parts for a flange connection are the HDPE Flange Adapter, Back-Up Ring, Gaskets and Bolts, Nuts and Washers.

Flange Connections

Bolted Flange Joint Assemblies (BFJA) are used to connect PE flange adapters to PE flange adapters, PE flange adapters to metal or plastic pipe flange connections, or PE flange adapters to valves. The PE flange adapters are attached to PE pipe or PE fittings using butt fusion or electrofusion. The components of the PE Bolted Flange Joint Assembly are shown in Figure 78.

Figure 78 : Fange Connection Components

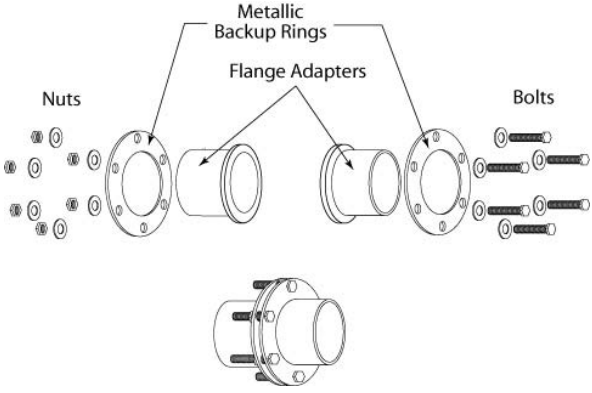

Align the flanges and back-up rings as shown above. The service pressure rating for the back-up ring should meet or exceed the pressure service of the pipe.

See PPI TN-38 for more details on BFJA, including bolt-tightening patterns, recommended bolt torques, and a Flange Checklist.

Gaskets are not normally required to seal PE to PE flange connections. When connecting PE flanges to other materials, gaskets are often used. The gasket must be soft enough to compress into small scratches in the flange surface but be internally reinforced to provide sufficient resistance against radial extrusion to handle the pressure rating of the service. Black and red rubber gaskets are satisfactory for applications of less than 100 psi. If optional gaskets are used, consult with the gasket manufacturer about the proper type of

gasket to use with PE flanges based on service conditions, chemicals exposure, pressure, and the bolt torque required to seat and seal the soft gasket surface.

A flange connection is a “fully restrained joint”. No external restraint devices are needed.

Figure 79: Ductile Iron Tee with Flanged Outlet

Solid DI Sleeve Connections to HDPE pipe

Solid Sleeves are ductile iron fittings designed to connect DI / PVC pipe to other piping materials including HDPE pipe. Most solid sleeves have a flange or MJ hub to attach to the HDPE pipe. On the ductile iron pipe side, a Megalug flange is attached to the pipe and a gasket is installed over the pipe and into the sleeve before bolting the Megalug to the Sleeve flange. A standard HDPE MJ Adapter kit is used on the HDPE pipe side to complete the assembly. Be sure to use the manufacturer’s recommended bolting procedures for this assembly. (See Figure 80)

Figure 80: Solid DI Sleeve Connections to HDPE pipe

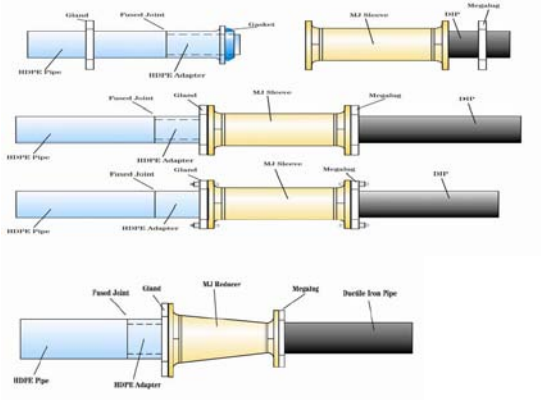

HDPE Bell Adapters to DI or PVC Pipe End

There are HDPE Bell Adapters available, up to 24” IPS, that are machined to the standard MJ Adapter internal configurations and have an external stainless steel backup ring installed to ensure positive seal contact. This connection incorporates a back-up flange behind the HDPE Adapter and a Mega-Lug flange on the PVC or DI pipe. Standard MJ seals and bolts are used to connect the assembly.

Figure 81: HDPE Bell Adapter to DI or PVC Pipe End

Dismantling Joint

Dismantling Joints simplify installations and replacement of flanged fittings in retrofitting applications. Dismantling Joints provide the solution for adding, repairing or replacing flanged fittings within a flanged pipe system. In all applications, a restrained dismantling joint is required unless otherwise specified.

Adjustable, slip joint design accommodates either wide gaps or close quarter installations and eliminates the need for precise measurements between flange connections. Available in sizes 2” and larger, for ductile iron or flanged HDPE piping systems, Standard flanges AWWA C207 Class D Flange. Other flanges are available upon request.

Figure 82: Dismantling Joint

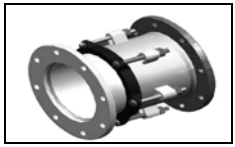

Mechanical Connection – HPDE to PVC

This coupling provides the convenience of bolted mechanical assembly of plain-end PVC pipe to plain-end high density polyethylene (HDPE) pipe without special adapters. Integral rows of teeth on the HDPE side grip the pipe, and diamond-shaped teeth safely grip the PVC pipe as you tighten the bolts to achieve metal-to-metal contact at the pads. This coupling is available in IPS pipe sizes up to 8" IPS. When connecting HDPE pipe to a mechanical coupling, restrain the fitting unless otherwise stated by the coupling manufacturer.

Figure 83: Mechanical Connection – HPDE to PVC

Figure 84: Mechanical Connection – HPDE to PVC

Stiffener Installation Guidelines

When connecting HDPE pipe to the bell end of a ductile iron or PVC pipe, it is recommended that a stiffener be added to the ID of the pipe to ensure a good connection between the seal in the bell and the pipe. Check the pipe for toe-in. If it is severe, cut the pipe back to remove it. If possible, have some means to press the stiffener into place. Lubricant will minimize the insertion effort required. A detergent or silicone grease is recommended.

There are two types of stiffeners available on the market. One type is a fixed diameter stiffener that matches the ID of the pipe being repaired (see Figure 85). Caution should be used when using fixed diameter stiffeners to be sure they are sized properly to obtain

the proper press fit in the HDPE pipe. These are mainly used with smaller diameter service lines.

Figure 85: Fixed Diameter Stiffener for HDPE pipe

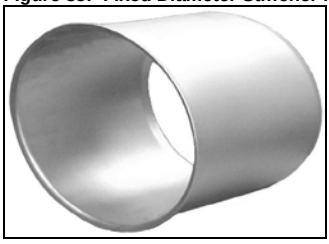

The other type of stiffener is a split ring stiffener (see Figure 86). These are normally made of stainless steel and provide a thin yet strong pipe wall reinforcement without disturbing the flow characteristic of the pipe.

Figure 86: Split Ring Stiffener for HDPE pipe

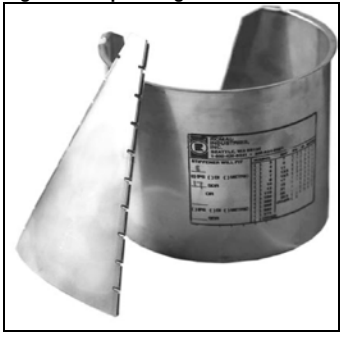

Figure 87: Install Split Ring Stiffener in HDPE pipe

Transition from PE Pressure Pipe to Gasket Jointed Pipe: Restraint Methods

A heat-fused PE piping system creates a monolithic structure which does not require thrust blocks to keep heat-fused PE fittings from separating from the PE pipe. When the pipe is pressurized two significant internal forces are present in the pipe; end thrust from bends or end caps is transmitted through the pipe as a longitudinal force and hoop stress (hoop thrust) occurs due to the internal pressure. Bell and spigot piping systems must have thrust blocks or restrained joints to prevent separation of pipe from fittings when there is a change of direction and where connected to fused PE pipe.

The longitudinal force tends to grow the pipe length while the hoop thrust expands the diameter (ever so slightly) and tends to contract the pipe length in proportion to Poisson's Ratio. In an all-PE pipe system the length effects from these two forces tend to cancel each other out. As a result, buried PE pipes are self-restrained and require no thrust blocking. A different situation occurs when PE pipe transitions to a type of pipe material that is joined by non-restrained gasket joints. The longitudinal force may no longer be present. The result is that hoop expansion is unbalanced and will cause contraction of the PE pipe. This contraction can result in pulling apart of gasket joints in line with the PE pipe.

Generally, it is necessary to anchor the ends of a PE pipeline that transitions into an unrestrained gasket jointed pipe system. If the gasket joints are restrained, anchoring is unnecessary. Restrained joints include butt fusions, electrofusions, socket fusions, bolted flange connections, MJ Adapter connections or other restrained mechanical connections. If an unrestrained bell and spigot or mechanical sleeve joint is in-line with the restrained section, the cumulative Poisson effect shortening and possible thermal expansion / contraction effect may cause in-line unrestrained joints or connections to be pulled apart. Therefore, unrestrained joints or mechanical connections that are in-line with fully restrained HDPE pipe must be restrained or otherwise protected against pullout disjoining.

The transition of PE pipe to DI and PVC pipe is discussed in this manual and in TN-36, *General Guidelines for Connecting PE Potable Water Pressure Pipes to DI and PVC Piping Systems*.

Restraint Methods

Wall Anchor

A typical pullout prevention technique is to restrain the transition connection by butt fusing a Wall Anchor in the HDPE pipeline close to the connection and pouring a concrete anchor around it as shown in Figure 88. Refer to the recommendations in Table 10 on anchor size and pull out loads.

Figure 88: Wall Anchor Diagram

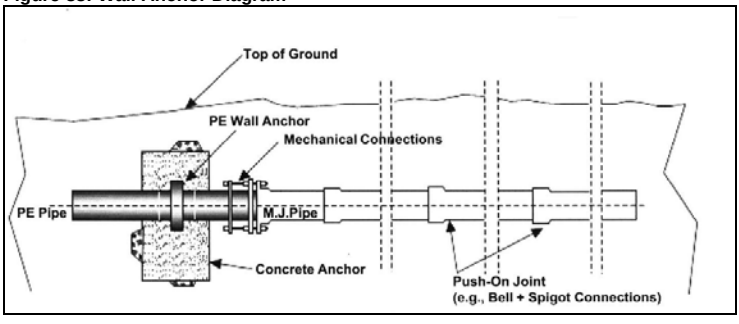

Mechanical Restraint Anchor

A typical pullout prevention technique is to restrain the transition connection and several non-PE bell and spigot joints down line from the transition connection as shown in Figure 89.

Figure 89: Mechanical Restraint of existing pipeline when attaching to HDPE pipe

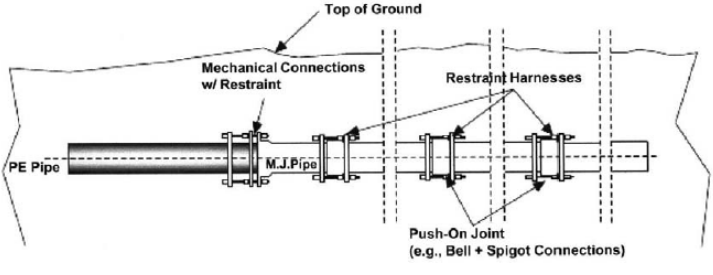

Buried Poly Anchor

This product is designed to be buried in the soil and resist any linear movement that might occur with polyethylene pipe without pouring a concrete anchor around it. In order to mobilize its buried anchoring restraint action, the Poly Anchor simply requires at least 85% standard Proctor Density soil compaction in-situ to the top of the plate. Consult with the fitting manufacturer to ensure that the anchor size is adequate for the bearing capacity of the soil.

Figure 90: Buried Poly Anchor

Design of Anchors and Thrust Blocks

Thrust blocks are not required at restrained connections. Butt fusion welds, electrofusion welds, side wall fusion welds, mechanical joint connections and flanged connections are considered restrained connections.

Thrust blocks shall be used to support fire hydrants. Concrete pads shall be used under metal valves to reduce settlement.

Anchor blocks shall be used when PE pipe connects to other pipe materials that use bell and spigot connections unless these connections are restrained for a sufficient number of joints to prevent pullout. See Figure 27 for typical connection.

Table 10: Approximate Soil Bearing Strengths

Soil Type	lbs/sq ft
Muck	0
Wet Clay/soft clay	500
Hard Clay	1,500
Sand	1,000
Sand and Gravel	1,500
Sand and gravel compacted	2,000
Crushed Stone	2,000
Hard Pan	4,000

For additional presumptive bearing capacities, see the Uniform Building Code. Caution! Soil support strength varies greatly. Actual geotechnical measurements are needed to determine actual support strength.

The design of an anchor is based on the force at the end of the PE pipe. The force can be caused by changes in temperature, soil movement or Poisson Effect. The Poisson Effect occurs when the pipeline is pressurized and causes the PE pipe to contract in length. Restraining the pipe with an anchor causes a thrust force to occur on the anchor. The table below gives the thrust force when the pipe is pressurized to 1.5 times its rated pressure. The 1.5 overpressure could occur due to surge or pressure testing. See Chapter 7, Appendix 3 of the *PPI Handbook of Polyethylene Pipe* for more discussion on the Poisson Effect.

When a pipeline is properly installed, soil movement is usually a minor force and can be ignored. The temperature of water in most pipelines changes seasonally and the resulting force is low. For example, most pipelines see a maximum temperature change of less than 20 degrees in a month. This will result in a thrust force of less than 25% of the value for any given pipe/DR in Table 10. In fact, for small thermal changes the soil is often sufficient to restrain contraction.

Table 11: Longitudinal Thrust Forces Caused by Poisson Effect for Pipe Pressurized to 1.5 times its Pressure Class

Nominal Size, inches	Actual DIPS Size, inches	DR 17 PC100 lbs	DR 13.5 PC130 lbs	DR 11 PC160 lbs
4	4.80	1,463	1,835	2,208
6	6.90	3,173	3,977	4,786
8	9.05	5,378	6,741	8,112
10	11.10	8,355	10,472	12,602
12	13.20	11,753	14,731	17,727

Note: Poisson force based on a pressure test or surge pressure to 1.5 times the pipe pressure rating

An anchor block stops the movement of the pipe end by transferring the force from the PE pipe to the soil. To determine the size of an anchor block, first determine the soil bearing strength. From the table “Approximate Soil Bearing Strengths”, assume that the sand on the project has a bearing strength of 1,000 per square foot.

If we are working with a 12” DIPS DR 11 pipe and will be hydrotesting the pipe at 240 psi, then the Poisson Effect force is calculated to be 17,727 lbs. The calculation of block size is:

17,727 lbs/1000 lbs/sq foot = 17.7 sq feet of area in contact with the soil.

Apply a safety factor of 1.5 to the block, 17.7 x 1.5 = 26.6 sq ft of contact area required. The safety factor accounts for variations in the presumptive soil values, construction, and temperature forces.

To size the block, the area of the pipe must be subtracted from the from the block size. If a 5.5 ft by 5.5 ft block is used, the area is 30.25 sq ft. The area of the pipe is 0.95 sq ft. The effective area of the block less the area of the pipe is:

30.25 - 0.95 = 29.3 sq ft.

This is more than the 26.6 sq feet needed and is acceptable. The block size has a safety factor of 1.5 as indicated. A drawing of a typical anchor block is shown in Figure 91.

Figure 91: Reinforced Anchor Configuration

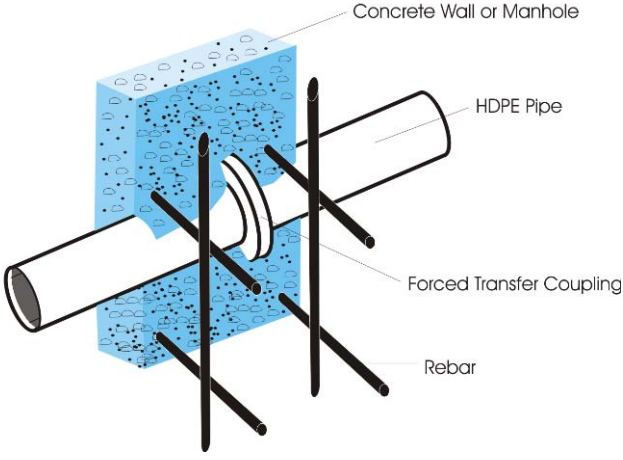

Quality Assurance and Field Testing

Leak Testing – Considerations for All Procedures

The intent of leak testing is to find unacceptable joint leakage in pressure piping systems. If leaks exist, they may manifest themselves by leakage or rupture. Leak tests of pressure systems generally involve filling the system or a section of the system with a liquid or gaseous fluid and applying internal pressure to determine resistance to leakage.

Safety is of paramount importance when conducting pressurized internal fluid leak tests. Although routinely performed, leak tests may be the very first time a newly installed system or repair will be subjected to stress.

- Even at relatively low internal pressures, leak testing with a pressurized internal fluid can generate very high forces that can be dangerous or even fatal if suddenly released by the failure of a joint or system component or a testing component.
- Always take safety precautions when conducting pressurized fluid leak tests.
- Restrain pipe, components and test equipment against movement in the event of failure. Joints may be exposed for leakage inspection provided that restraint is maintained.
- Keep persons not involved in testing a safe distance away while testing is being conducted.
- Liquids such as water are preferred as test fluids because less energy is released if something in the test section fails catastrophically. During a pressure leak test, energy (internal pressure) is applied to stress the test section. If the test fluid is an incompressible liquid such as water, the energy applied to pressurize the liquid transfers primarily to the pipe and components in the test section. However, if the test fluid is a compressible gas, energy is applied to compress the gas as well as to stress the piping section. If a catastrophic failure occurs during a pressurized liquid leak test, the overall applied energy is much lower and energy dissipation is rapid.
- However, if catastrophic failure occurs during a pressurized gas test, energy release is many times greater, much more forceful and longer duration.
- Where hydrostatic testing is specified, never substitute compressed gas (pneumatic) for liquid (hydrostatic) testing.
- Maximum leak test pressure is temperature dependent. If possible, test fluid and test section temperatures should be less than 80°F (27°C). At temperatures above 80°F (27°C), reduced test pressure is required. Contact the pipe manufacturer for technical assistance with elevated temperature pressure reduction. Sunlight heating of exposed PE pipe, especially black PE pipe, can result in high pipe temperature.

- Before applying test pressure, allow time for the test fluid and the test section to temperature equalize. Hydrostatic leak tests typically use cooler liquids so the liquid-filled test section will tend to equalize to a lower temperature near test liquid temperature. Compressed gases used in pneumatic leak tests do not have similar temperature lowering effects, so it is more likely that test pressures will have to be reduced due to elevated temperature effects when conducting pneumatic leak tests. Bursting can result if test pressure is not reduced for elevated test section temperature.
- Leak Test Pressure and Duration – The maximum allowable leak test pressure and leak test time including initial expansion, and time at leak test pressure should be in accordance with the following equation and Tables 12 and 13.

$$P_{(T)} = \frac{2 \times HDS \times F_t \times H_T}{(DR - 1)}$$

Where:

$P_{(T)}$ = Leak Test Pressure, psig, for Leak Test Time, T (from Table 11)
T = Leak Test Time, hours
HDS = PE material hydrostatic design stress for water at 73°F (23°C), psi
F_t = PE material elevated temperature reduction factor
H_T = Leak test duration factor for leak test time, T
DR = Pipe dimension ratio

Table 12: Leak Test Duration Factor, H_T

Leak Test Pressure $P_{(T)}$ (psig)	Leak Test Time T (hours)	Leak Duration Factor H_T
$P_{(8)}$	≤ 8	1.5
$P_{(48)}$	≤ 48	1.25
$P_{(120)}$	≤ 120	1.00

Table 13: PE Material Hydrostatic Design Stress (HDS)

PE Material Designation Code	HDS for Water at 73°F (psi)
PE2708	800
PE3608	800
PE3710	1000
PE4710	1000

Maintenance and Repair

Refer to PPI TN-35 *Repairing Buried HDPE Potable Water Pressure Pipe* (2006) for additional repair options.

Electrofusion Repair

Figure 92: Electrofusion Repair Schematic

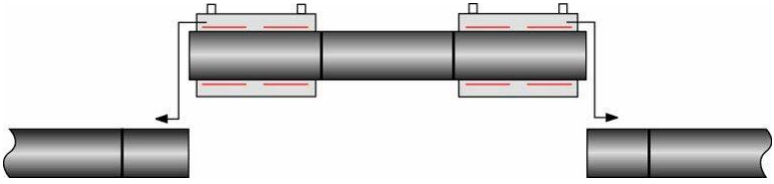

Figure 93: Electrofusion Field Repair

Flange Repair

Figure 94: Flange Repair Schematic

Mechanical Repair

Figure 95: Mechanical Repair Sleeve

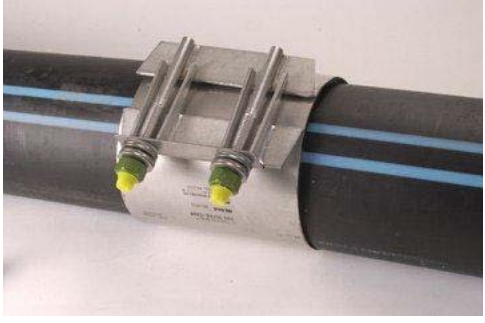

Repairing HDPE Water Service Lines with Mechanical Couplings

Mechanical couplings provide a quick and easy solution for the repair of HDPE service lines. To repair a section of damaged service line tubing, first,shut off the flow of water via control valve (i.e. curb stop, meter yoke valve, etc.) or by squeezing off the HDPE service tubing using your company's approved squeeze-off procedure. Then simply cut out the section of damaged tubing and replace it with a new HDPE section between two mechanical couplings. Also, there are mechanical couplings available that offer different prefabricated repair lengths, allowing you to remove the damaged HDPE and replace it with a single longer mechanical coupling. Figure 96 depicts an insert type repair coupling.

Figure 96 – Repair Coupling

PLASTICS·PIPE·INSTITUTE®

WWW.PLASTICPIPE.ORG

105 DECKER COURT, SUITE 825
IRVING, TX 75062

JANA

WWW.JANALAB.COM

280B INDUSTRIAL PKWY S
AURORA, ONTARIO L4G 3T9

ALLIANCE FOR pepipe

WWW.PEPIPE.ORG

1331 H STREET, NW, SUITE 1100
WASHINGTON, DC 20005